Residential Price Book

Volume 40

US effective date January 15, 2023

Yale® Home Finishes

Please check each product's specifications for availability.

Yale Smart Locks

Includes Yale Assure, Nest x Yale and Yale Pro Locks*

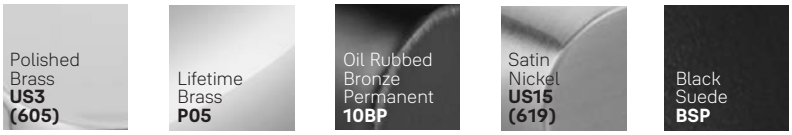

***Select models not available in all finishes.**

ANDERSEN WINDOWS & DOORS

Assure Lock for Andersen

---

pivot COLLECTION®

YH COLLECTION®

NEW TRADITIONS®

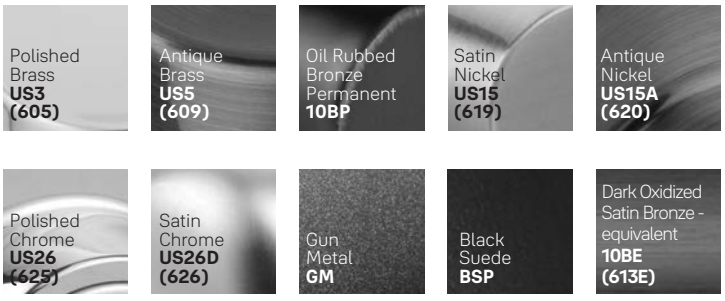

YE SERIES®

Protection for the home, peace for the mind.

Yale is trusted by millions of people every day to keep what's important to them safe. Our innovations have protected their homes, families and belongings for over 180 years. We have expanded from a leader in mechanical locks to innovating connected smart locks and homes. We were there for your grandparents (and probably theirs) and we'll be there for your children. Today, and every day to come. Shop our wide range of smart locks, keypad locks and smart storage products.

Yale **Trusted every day**

Contents

Terms of Sale Ordering Information 4
Yale® QuickShip™ 9
Yale® Assure Family
- Assure Lock® 10
- Assure Lever® 14
- Assure Lock® for Andersen® Patio Doors 18

Assure Lock® Interconnected 22
Yale Pro® 26
Nest x Yale Lock 30
Yale Smart Storage Solutions 34
August® Home 36
YH Collection® Interconnected Mechanical 38
Pivot Collection® from Yale® 43
YH Collection® from Yale®
- Knobs 45
  Bridgeport, Dartmouth, Cambridge, Oxford
- Levers 48
  Academy, Augusta, Charleston, Delaware, Kincaid, Marina, McClure, Milan, Monroe, Norwood, Pacific Beach, Valdosta, Virgo

Deadbolts 53
Latches 56
New Traditions® from Yale®
- Knobs 57
  Cirrus, Horizon, Oasis, Terra, Valley
- Levers 60
  Mesa, Niagara, Prairie, Savannah, Vidalia, Woodland
- Deadbolts 63
- Latches 66

Decorative Handlesets 67
Homestead, Jamestown, McKinley, Pedestal, Rainier, Ridgefield, Teton
YE Series® from Yale®
- Knobs 75
  Athens, Sinclair, Waycross
- Levers 75
  Alpharetta, Edisto, Keowee, Seabrook, Wando
- Handlesets 78
  Lenoir, Johns Creek, Meyer Park
- Deadbolts 78
- Pocket Door Locks 82

Handing 52, 61, 79
Accessories 83
Keying Information 84
UL Ratings 7
Mounts 13, 17, 29, 33, 87

Yale® Terms and Conditions of Sale

Terms & Conditions

Minimum freight requirements apply. The Terms and Conditions contained on the Yale Website, as published from time to time, shall apply to all purchases of Goods. To the extent that any terms in any invoice conflict with the terms of the Price List, the terms of the Price List shall govern.

For additional information, see the latest Terms & Conditions at: http://www.yalehome.com/en/yale/yalehome/terms-and-conditions

Canada: For Terms & Conditions and Warranty information pertaining to product sales in Canada, please visit www.assaabloy.ca/terms

Note that some products may not be available in Canada as well as some of the programs offered in this price book may differ between the USA and Canada. Please contact your sales representative for more information.

Applicable Law; Definitions

All sales of Yale branded goods ("Goods") shall be governed by the laws of the State of Connecticut, including the Uniform Commercial Code as in effect in Connecticut on the date of sale (the "Code"). Whenever a term defined by the Code is used in these Terms and Conditions of Sale, the definition contained in the Code shall apply here. The purchaser of the Goods agrees that any proceeding brought in connection with the purchase of the Goods shall be brought in any court of competent jurisdiction in Connecticut.

Purchase Price

The purchase price of the Goods is subject to change without notice, and the prices prevailing at the time the Goods are shipped by Yale shall apply unless Yale has agreed in writing to a different price or has given a prior written quotation which constitutes a firm offer. Yale does not guarantee that the price, terms and conditions for reorders of the Goods will be the same as contained in the Yale Price List. Rebates or refunds for Goods that represent dealer stock on hand or for Goods already shipped by Yale will not be given due to any price reduction. The purchase price for any Goods purchased shall be due as and when specified in the invoice covering such Goods. Title to the Goods shall not pass to purchaser until full payment for the Goods is made to Yale.

Binding for all Purchases

All orders, whether solicited or written by our representatives or delivered by you are deemed offers by you to purchase our products. Our acceptance of each such offer is expressly subject to and conditioned on your assent to the Terms and Conditions of Sale contained herein (assent may be deemed to occur if we do not receive a written objection or retraction of such offer within 48 hours after you receive our confirmation of receipt of such offer). No other terms or conditions shall apply.

Prices and Minimum Charges

All prices are subject to change without notice. Prices prevailing at commencement of shipment apply. Regardless of whether ordered for job shipments or for stock. Only orders in excess of $1500 net are shipped freight prepaid. Due to the expense involved in entering, handling, packaging, shipping and charging, orders of low value will still be accepted yet are assessed as follows:

Orders Shipped from Guadalajara, Mx. (YH Collection®, New Traditions®)

- Orders of less than $1500 net are subject to a freight/handling charge of $100.

No orders of less than $250 will be accepted as a factory order.

Orders Shipped from Berlin, CT.

- See Yale® QuickShip™ rules, page 9.

Additional charges may apply for expedited shipping, "project packing", special labeling, or special shipping instructions.

Payment

Standard sales terms are 2/10 net 30. The 2.0% discount only applies for invoices paid in full within 10 days of invoice date. Invoices not paid in full within 30 days of invoice date shall incur a service charge of 1.5% per month for each month or fraction thereof (or the maximum rate permitted by law) until paid in full. All delinquent accounts are subject to credit hold.

Freight

All products are invoiced FOB our factory in Guadalajara, MX. or Berlin, CT. Title and risk of loss and damage pass to you upon our transfer of product to carrier. We pay freight charges only on orders in excess of $1500 net to a single continental U.S. destination by a carrier and routing of our choice. (See Prices and Minimum Charges above.) You will be invoiced and agree to pay all higher freight charges for extra destinations and for special carrier(s) designated by you. Shipping schedules are estimated only and cannot be guaranteed. We are not liable for any delays in shipments.

Discrepancies must be noted with carrier upon receipt as they are your responsibility to claim.

Minimum Annual Purchase Requirement

We may discontinue direct sales to you if you do not meet the minimum annual purchase requirement (currently $10,000), based on total accepted, shipped and non-canceled orders within each calendar year.

Limited Warranty

Yale, the "Warrantor", extends the following LIMITED WARRANTY to the original purchaser for a single family home, (herein the "lockset" or "locksets") shipped to, and installed in the U.S. or Canada. Because the Company cannot control the quality of Devices sold by unauthorized sellers, this Warranty applies only to Devices purchased from the Company or a Company authorized seller in the United States of America, unless otherwise prohibited by law. The Company reserves the right to reject warranty claims from purchasers for Devices purchased from unauthorized sellers, including unauthorized internet sites.:

1. Nest x Yale Lock: Please visit: https://us.yalehome.com/Yale/Yale%20US/Products/NestxYale/Nest%20Yale%20Lock%20Warranty2.21.pdf
2. YH Collection® from Yale®, New Traditions® from Yale®: LIFETIME LIMITED finish and mechanical operation warranty.
3. Yale Assure Lock®, Assure Lever®, Assure Lock® for Andersen® Patio Doors, Yale Pro®: LIFETIME LIMITED finish and mechanical operation warranty; ONE (1) YEAR electronic warranty.
4. Yale Edge Series®: ONE (1) YEAR finish warranty; FIVE (5) YEAR mechanical operation warranty.
5. Yale Mechanical Interconnected: THREE (3) YEAR finish and mechanical warranty.
6. Yale Electronic Interconnected: ONE (1) YEAR on finish and electronic warranty; THREE (3) YEAR mechanical warranty.
7. For non-lock electronic products please visit: https://us.yalehome.com/en/warranty/

For additional information, visit yalehome.com/warranty

Yale® Terms and Conditions of Sale

1. ELECTRONIC COMPONENTS.
Electronic components warranted ONE (1) YEAR. Yale warrants to the original purchaser of the lockset(s) manufactured by it to be free of defects in material and workmanship as long as the consumer (as the term "consumer" is defined under United States Code Section 2301(3)) occupies the residential premises upon which the lockset was originally installed. If, after initial installation of the lockset, any of the electronic parts or the finish should become defective, the Warrantor will repair or replace the locksets, in accordance with this Limited Warranty. Electronic components include the touchscreen, circuit boards, and motor drive. a. The warranty on the replacement lockset will be limited to the unexpired term of the original warranty. b. Electronic components under warranty may be replaced with new or refurbished parts.

2. MECHANICAL PARTS & FINISH.
Yale warrants to the original purchaser of the locksets manufactured by it to be free of defects in material and workmanship as long as the consumer (as the term "consumer" is defined under United States Code Section 2301(3)) occupies the residential premises upon which the lockset was originally installed. If, after initial installation of the lockset, any of the mechanical parts or the finish should become defective, the Warrantor will repair or replace the locksets, in accordance with this Limited Warranty.
a. When the lockset has been used for commercial, institutional, industrial or other installations other than single-family dwellings, the finish warranty is reduced to ONE (1) YEAR and the mechanical parts warranty is reduced to THREE (3) YEARS.
b. When the lockset has been used for commercial vacation rental applications, the finish warranty and mechanical parts warranty is reduced to THREE (3) YEARS.
c. The warranty on the replacement lockset will be limited to the unexpired term of the original warranty.

3. CONDITIONS AND EXCEPTIONS.
This Limited Warranty shall apply only when the lockset is properly installed in accordance with local codes, ordinances and regulations, the printed instructions provided with it and good industry practices. THIS WARRANTY DOES NOT COVER defects caused by: modification, alteration, repair or service of the lockset by anyone other than Warrantor or an authorized designee of Warrantor; physical abuse to, or misuse of, the lockset or operation of it in a manner contrary to the accompanying instructions; shipment of the product to anyone other than Warrantor for service; improper installation; acts of God; fire; flood; casualty; failure to exercise normal maintenance; for the consequences of uses for which locksets were not designed or designated, or for defects caused by the use of paints, solvents or other chemicals which come in contact with the lockset.
THIS WARRANTY DOES NOT COVER scratches or abrasions. THIS WARRANTY DOES NOT APPLY to locksets or component parts of locksets that were not originally manufactured by Warrantor. THIS WARRANTY SHALL NOT APPLY TO SUBSEQUENT OWNERS.

4. SERVICE AND REPAIR EXPENSE.
Under this Limited Warranty the Warrantor will provide only a replacement lockset or a part of it. Warrantor will pay reasonable shipping costs for surface transportation only for locksets returned to Warrantor's Customer Service Department. Warrantor will ship replacement parts under this Limited Warranty at its expense by surface transportation only. Any special handling, express or expedited service or different method of transportation shall only be provided at the request and expense of the purchaser of the locksets. However, if warrantor determines that a lockset does not qualify for repair or replacement under the applicable Limited Warranty, Warrantor will notify the consumer of the estimated costs of repair or replacement and obtain the consumer's authorization and agreement to pay actual repair or replacement costs before proceeding with non-warranty repair or replacement. Warrantor shall have no liability to pay any costs for repairs performed by anyone other than Warrantor or its designee, unless in each instance Warrantor has given written approval for such repair. Warrantor shall not be responsible for any costs incurred for the removal or reinstallation of locksets covered by this Limited Warranty.

5. LIMITATION ON IMPLIED WARRANTIES.
ANY EXPRESS WARRANTY NOT PROVIDED IN THIS LIMITED WARRANTY, AND ANY REMEDY FOR BREACH OF CONTRACT THAT, BUT FOR THIS PROVISION, MIGHT ARISE BY IMPLICATION OR OPERATION OF LAW, IS EXCLUDED AND DISCLAIMED. THE IMPLIED WARRANTIES OF MERCHANTABILITY AND OF FITNESS FOR ANY PARTICULAR PURPOSE ARE EXPRESSLY LIMITED TO THE DURATION OF EACH EXPRESS WARRANTY PERIOD.
a. Should the locksets be considered a consumer product as may be covered by the Magnusson-Moss Federal Warranty Act, please be advised that some states do not allow limitations on how long an implied warranty lasts, so the above limitation may not apply to you.

6. CLAIM PROCEDURE.
To obtain performance of any obligation under this Limited Warranty, you must contact: Yale Home, Customer Service Department, 225 Episcopal Road, Berlin, CT 06037 USA, Tel 1-800-438-1951 Fax 1-800-338-0965.
a. The Warrantor will only honor replacement with an identical or similar lockset or parts of it which are manufactured or distributed by the Warrantor.
b. Customer service department hours are between 8:00 am and 4:30 pm EST, Monday through Friday, except holidays.

7. DISCLAIMER.
THERE ARE NO WARRANTIES THAT EXTEND BEYOND THE DESCRIPTION ON THE FACE OF THIS DOCUMENT. NO OTHER EXPRESS WARRANTY HAS BEEN MADE OR WILL BE MADE ON BEHALF OF THE WARRANTOR WITH RESPECT TO THE LOCKSET OR THE INSTALLATION, OPERATION, REPAIR OR REPLACEMENT OF THE LOCKSET. THE MAXIMUM LIABILITY OF YALE HEREUNDER IS LIMITED TO THE PURCHASE PRICE OF THE LOCKSET. UNDER NO CIRCUMSTANCES SHALL YALE BE LIABLE TO PURCHASER OR ANY OTHER PERSON FOR ANY SPECIAL OR CONSEQUENTIAL DAMAGES, WHETHER ARISING OUT OF TORT, BREACH OF WARRANTY, BREACH OF CONTRACT OR OTHERWISE.
a. Should the locksets be considered a consumer product as may be covered by the Magnusson-Moss Federal Warranty Act, please be advised that (i) some states do not allow the exclusion or limitation of incidental or consequential damages, so the above limitation or exclusion may not apply to you, and (ii) this Limited Warranty gives you specific legal rights, and you may also have other rights which vary from state to state.
b. Warrantor reserves the right to make changes in designs and specifications or to make additions or improvements on its products without notice and without incurring any obligation to incorporate them on products previously manufactured.

General Conditions

(a) Shipping; Acceptance; Risk of Loss; Security Interest. Any shipment date given by Yale is approximate and not a guarantee of delivery on the shipment date. Failure of a purchaser to inspect the Goods and notify Yale or any authorized distributor or factory representative in writing of such purchaser's rejection of any Goods upon completion of inspection within 24 hours after receipt of shipment, in each case setting forth the specific grounds for rejection, shall constitute unconditional acceptance of the Goods. Title to the Goods shall not pass until the full purchase price

Yale® Terms and Conditions of Sale

therefore has been paid in full. If after acceptance, the purchaser fails to pay the full purchase price as and when due, Yale shall be entitled to a writ of immediate possession to recover possession of the Goods. Risk of loss or damage to the Goods passes to the purchaser upon delivery of the Goods to the carrier regardless of who pays the shipping costs for such Goods. The purchaser hereby grants to Yale a continuing security interest in and to the Goods purchased from and/or financed by or through Yale to secure repayment of any debt or obligation owed to Yale by the purchaser.

(b) Force Majeure. Under no circumstances shall Yale be liable for failure or delay in delivery occasioned in whole or in part by fire, flood, explosion, casualty, accident, acts of God or natural catastrophe, war, riot, strike, lock-out or other labor dispute or industrial disturbance, embargo, law, regulation, ruling, order or requirement of any government or government agency or authority, court, tribunal or military authority, shortage or failure of, or Yale's inability to obtain, Goods, appropriate supplies, materials, equipment, transport or labor, or any other cause or circumstance beyond Yale's control, including delays due to a purchaser's acts omissions or rush circumstances. Under such circumstances, Yale may extend the date of delivery for a reasonable period of time after the period of the delay, apportion its products among its customers in such manner as it deems equitable and substitute for products which cannot be obtained within a reasonable period of time, and the purchaser shall not be relieved of accepting delivery of such products.

(c) No Other Warranty. The only warranty given in connection with any Goods sold by Yale is its Limited Warranty to the first purchaser-user provided in Section 3 of these Terms and Conditions of Sale, and no other representations or warranties of any kind shall be made or given by any distributor or other person in connection with the sale of the Goods.

Enforcement Policy

In the event Yale deems it necessary to collect any amount due it from any purchaser, the purchaser shall pay to Yale, upon demand, all costs and expenses of such collection or enforcement including, without limitation, reasonable attorneys' fees and all other costs of collection. In addition, Yale will assess a 1.5% finance charge per month (18% APR) on amounts not paid when due.

Returned Goods Policy

Yale will not accept returned Goods from purchasers for credit or exchange. Under limited exceptions the following conditions generally would apply:
(a) Written consent to the return of the Goods must be obtained from the Yale Customer Service Manager prior to returning the Goods (at Yale's discretion);
(b) Goods returned must be carried in the current QuickShip™ inventory as shown in the Yale Price Book;
(c)Any returned Goods shall be accompanied by a completed Merchandise Return Authorization Form provided to the purchaser by Yale;
(d)Shipping charges and insurance must be prepaid by the purchaser;
(e)All returned Goods accepted by Yale shall be subject to a minimum charge of twenty-five percent (25%) of the original purchase price or the current price, whichever is lower, to cover the cost of testing and repackaging. Additional charges may be imposed if the returned Goods, in the opinion of Yale, require reconditioning; and
(f)Any credit given will be based on the original purchase price or the current price for the returned Goods, whichever is the lower. As an exception to the above rules, if items are purchased from ASSA ABLOY's QuickShip program, they may be returned to the Yale warehouse with a 25% re-stocking fee. Authorization in form of an 'Authorization Return Form', must be issued prior to material being returned. Note: QuickShip goods must be returned within 30 days of purchase.

Terms and Conditions Contained in Yale® Price Book

The Terms and Conditions contained in the Yale Price Book, as published from time to time, shall apply to all purchases of Goods. To the extent that any terms in any invoice conflict with the terms of the Yale Price Book, the terms of the Yale Price Book shall govern.

Dispute Resolution

All disputes, controversies, claims or differences which may arise between the parties out of or in relation to the purchase of Goods covered by any invoice or otherwise made by purchaser from Yale (including questions as to whether a matter is governed by this arbitration provision) shall be solely and exclusively settled by binding arbitration conducted in accordance with the American Arbitration Association (AAA) Rules. All hearings and proceedings regarding arbitration shall take place in Berlin, Connecticut. All disputes involving less than $250,000 shall be heard by a single arbitrator, and all other disputes shall be heard by panel of three arbitrators. The arbitrators shall be selected in a manner as set forth by the AAA. Reasonable discovery shall be allowed. The costs and fees of the arbitration shall be allocated by the arbitrators. The award rendered by the arbitrators shall be final and binding upon the parties, and judgement may be entered and enforced in accordance with applicable law in any court having jurisdiction thereof. The resolution of the arbitration shall be kept confidential by the parties and the arbitrators. Nothing herein shall bar the right of either party to obtain injunctive relief against conduct that will cause irreparable loss or damages under rules of equity. The parties hereby consent to jurisdiction in any court in the State of Connecticut with respect to the enforcement of any arbitration award or injunctive or other judicial relief.

Changes or Cancellations

Any item additions, quantity changes or specification changes made to accepted orders will generate a new acknowledgment for the entire order and a new shipment date. All sales are final. Quantity reductions or cancellations are accepted only with prior written consent at least 2 weeks prior to the scheduled shipment date. Cancellations or reductions after 2 business days of acknowledgement may be subject to a 25% fee. We may without liability cancel any accepted order before shipment if our credit department does not approve your credit.

Programs

All support programs related to the business are only applicable to customers whose account is current and in good standing.

Customer Service

Yale Home, Customer Service Department
225 Episcopal Road, Berlin, CT 06037 USA
Tel 1-800-438-1951 | Fax 1-800-338-0965

Canada
160 Four Valley Drive, Vaughan, ON LK4 4T9 Canada
Tel 1-800-461-3007 | Fax 1-800-461-8989

Customer service department hours are between 8:00 am and 4:30 pm EST, Monday through Friday, except holidays.

Ordering Information

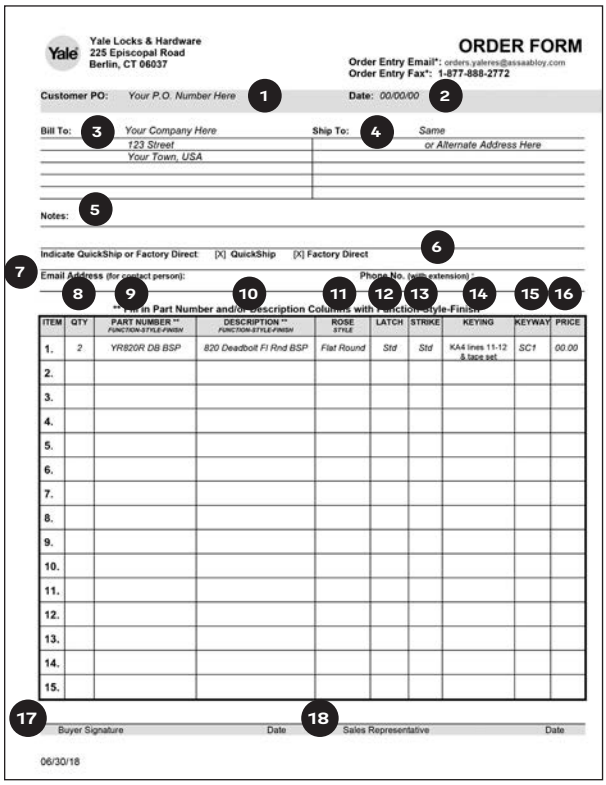

Yale Locks & Hardware
225 Episcopal Road
Berlin, CT 06037

ORDER FORM

Order Entry Email*: orders.yaleres@assaabloy.com
Order Entry Fax*: 1-877-888-2772

Customer PO: *Your P.O. Number Here* 1 Date: 00/00/00 2

Bill To: 3 *Your Company Here*
123 Street
Your Town, USA

Ship To: 4 *Same*
or Alternate Address Here

Notes: 5

Indicate QuickShip or Factory Direct: [X] QuickShip [X] Factory Direct 6

7 Email Address (for contact person): Phone No. (with extension):

8 9 10 11 12 13 14 15 16

Enter Part Number and/or Description Columns with Function-Style-Finish

ITEM	QTY	PART NUMBER ** FUNCTION-STYLE-FINISH	DESCRIPTION ** FUNCTION-STYLE-FINISH	ROSE STYLE	LATCH	STRIKE	KEYING	KEYWAY	PRICE
1.	2	YR820R DB BSP	820 Deadbolt FI Rnd BSP	Flat Round	Std	Std	KA4 lines 11-12 & tape set	SC1	00.00
2.									
3.									
4.									
5.									
6.									
7.									
8.									
9.									
10.									
11.									
12.									
13.									
14.									
15.									

17 Buyer Signature Date 18 Sales Representative Date

06/30/18

1 Customer Purchase Order Number

Enter the purchase order number that your company has assigned for this order. No order will be processed without a purchase order number and written acknowledgement.

2 Order Date

Enter the date on which you are placing the order.

3 Bill To

Enter the billing name of the company and the full mailing address.

4 Ship To

Enter the company name and the full address to which the order should be shipped. If that information is exactly the same as the "Bill To" information, enter "Same" on the lines provided.

5 Special Instructions

- Enter any special shipping, packing, product, keying, or delivery requests in this area.
- Enter job name if applicable.
- For warehouse orders (non job orders) full case quantities should be ordered.
- UL RATING REQUIREMENTS:
  Enter when UL is required.
  See price book pages for listing. Underwriters Laboratories requires that the Fire Shield packed with each UL listed products, UL listed latches and the correct strike to be used.

6 Product Origination

Indicate QuickShip or Factory Direct.

7 Email Address and Phone Number

Indicate an email address and phone number (with extension) to ensure Yale Locks is able to respond with questions regarding the order.

8 Quantity (Units Only)

Standard Case Quantities

	Assure and Pro	Nest x Yale Lock	YH Collection Box Pack(SP)	YH Collection Clear View (CV)	New Traditions Box Pack(SP)	New Traditions Clear View (CV)	Yale Edge Series Box Pack(SP)
Dummy			12	6	12	6 Pair	30
Knobs			24	6	24	6	30
Levers	6		12	6	12	6	20
Deadbolts	6	6	12	6	12	6	30
Combosets			12	6	12	6	10
YH Interconnected Mechanical			4				
Handlesets			6		6		6
Handlesets Interior Pack			6		6		
Pocket Door Locks							60

9 Part Number

FUNCTION-STYLE-FINISH
FUNCTION: Function numbers and descriptions are noted with each series throughout this Yale Price Book.
STYLE: Indicate by using the two letter designation of the names, listed on price pages.

Ordering Information

FINISH: Indicate by using the BHMA designation of the names, listed on price pages.

US	BHMA	Description
3	605	Polished Brass
5	609	Antique Brass
	P05	Lifetime Brass
10BE	613E	Dark Oxidized Satin Bronze-equivalent
10BP		Oil Rubbed Bronze Permanent
15	619	Satin Nickel
15A	620	Antique Nickel
26	625	Polished Chrome
26D	626	Satin Chrome
32D	632	Stainless Steel
BSP		Black Suede
BLK		Black
GM		Gun Metal

Split Finishes: Print as stated in current price book

10 Description

FUNCTION-STYLE-FINISH-PACKAGING-HANDING
FUNCTION: Function numbers and descriptions are noted with each series throughout this Yale Price Book.
DESIGN: Indicate by using the two letter designation of the names, listed on price pages.
FINISH CODES: see no. 9 reference above.
PACKAGING: All locks are shipped Box Packed as standard unless otherwise specified. SP: Box Packed (Standard Packed)
CV: Clear View / BP: Bulk Pack – Lock trim individually boxed and packed 24 per case. Latches, strikes, screws packed separately. For Retail Packaging (color sleeves), place an R in front of the part number. Retail Packaging is available for select Yale Assure products only.
HANDING: The hand of a door is always determined by facing the outside of a door. See diagram on page 52, 61, 79 for further details.
LH: If the hinge is on the left side of the door, then the door is left-handed.
RH: If the hinge is on the right side of the door, then the door is right-handed.

11 Decorative Rose Style

Specify decorative rose style selection.
Standard rose ships unless specified.

12 Latch Options

Specify 2-3/8", 2-3/4", or Adjustable along with latch face type.
See Examples:
SC (Square Corner)
RC (Round Corner)
DI (Drive-In)
ADJ-SC (Adjustable Square Corner)
See pages 56 (YH), and 66 (NT) for more details.

13 Strike Options

Specify strike type. See page 83 for more details.

14 Specifying Keying

Keying requirements must be specified at time of order.
KD: Keyed Different
KA: Keyed Alike
MK: Master Keyed* (A single master key operates all locks within the system.)
BK: Builder Key* (Builder key operates all locksets within a system. Use of homeowner's key cancels the builder key.)
BMK: Builder Keyed and Master Keyed* (Builder key and master key operates all locksets within a system. Use of tenants key cancels the builder key.)
K-T-P: Keyed To Pass (For apartment vestibules or laundry rooms. All tenant keys will operate.)
GMK: Grand Master Keyed* (More than 1 master key system operated by a single master key.)
BGMK: Builder Keyed and Grand Master Keyed* (Combination of BK and GMK.) *Builder and/or master keys are sent certified mail to the "Bill To"address, referencing the purchase order number and the original order number. All Master Keyed orders shipped with three (3) master keys at no extra charge. All Builder Keyed orders are shipped with ten (10) builder keys at no extra charge.

15 Keyway / Key System Specifications

KEYWAY: All locks will be shipped with our New Traditions KW 5-Pin cylinder or YH Collection 6-Pin cylinder as standard depending upon the locks ordered. If SC keyway is specified it will ship as 5-pin standard. Para keyway will ship as 6-pin standard. See the available options sections in this Price Book.
KEY SYSTEMS: Note the specific key system to be used if any. This is particularly important if the order is an extension of an existing system.

Yale®
QuickShip™

16 Price

Enter the price. NOTE: Price may be adjusted if required to correspond to published pricelist.

17 Buyer Signature

No order will be processed without an authorized signature.

18 Yale Company Representative

If the order is written by someone other than the authorized buyer, the full name of the person placing the order.

Submit The Order

FAXING ORDERS
Fax number for Yale Assure and all QuickShip orders:
1-877-888-2772
Fax number for Factory Direct New Traditions and YH Collection orders:
1-800-338-0965

EMAILING ORDERS
Email all orders to: **orders.yaleres@assaabloy.com**

IMPORTANT: Indicate whether order is:
- **QuickShip**
- **Factory Direct**

Yale QuickShip Program*

***Available only with Yale Residential products. Orders requiring keying or non-standard changes will delay ship time.**
(examples: cylinders, latches, etc.)

RULES OF ENGAGEMENT:

- **Orders placed ship following day.**
- **Make NO additional investment and expand your offering**

ADDITIONAL CHARGES:

- **Item is always a chargeable addition to product cost.**
- **Item is a chargeable addition to Berlin, CT orders only.**
- **Freight charge will be applied to orders less than $150.00 (contiguous 48 states only, Alaska and Hawaii are 'plus freight')**
- **Yale reserves the right to limit quantities**
- **Net keying charges:**
  $1.00 per cylinder for keyed-alike (KD over 4 locks)
  $3.00 for BK and MK

HOW to ORDER:

Look for **BOLD** prices throughout all Yale product listings for **Yale QuickShip** availability.

- **Email Yale QuickShip orders to: orders.yaleres@assaabloy.com**
- **Fax ALL Yale QuickShip orders to: 1-877-888-2772**
- **Call Yale Customer Service for details: 1-800-438-1951**

Assure Lock®

Assure Lock Keypad
YRD216

Assure Lock Touchscreen
YRD226/622

Assure Lock SL
YRD256

Yale Assure Lock provides versatility and convenience for securing your home. The locks can operate as standalone electronic deadbolts or be upgraded with a Z-Wave, Zigbee or Yale Access Module to work with your smart home.

- Create up to 250 unique entry codes to share with friends and family (25 for Standalone models).
- Keypads wake with a touch and feature backlit numbers that won't wear off.
- Key free model features a 9V battery back-up to prevent lockouts.
- Available Smart Modules include Z-Wave, Zigbee or Yale Access.
- When upgraded with a Yale Smart Modules, lock and unlock remotely, view access history and share access rights from your smartphone with most Z-Wave and Zigbee systems or with the Yale Access app when using a Yale Access Module.
- Available with 90 minute fire rating as YRD622/642. Please contact your sales team for more information.

NOTE: Yale Assure Lock® Deadbolts ship from the QuickShip warehouse in Berlin, CT Only. Freight minimums are separate from AAG Factory items.

Assure Lock®

Keypad Deadbolt Exterior YRD216

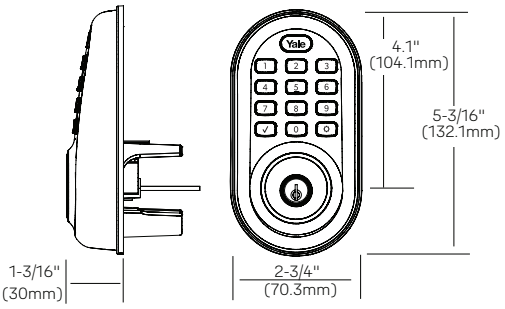

Interior

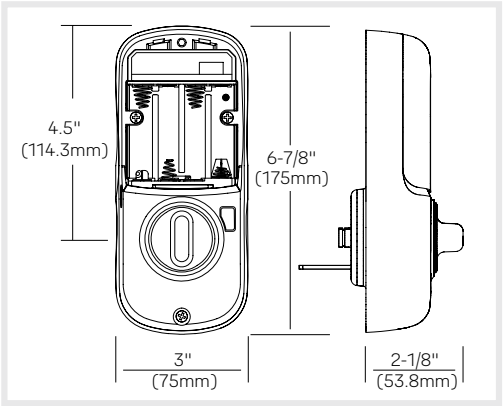

Touchscreen Deadbolt Exterior YRD226/YRD622

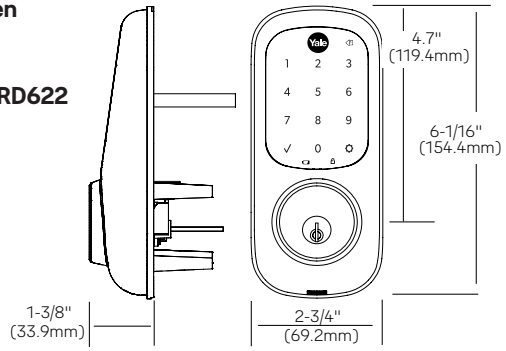

Touchscreen SL Deadbolt Exterior YRD256

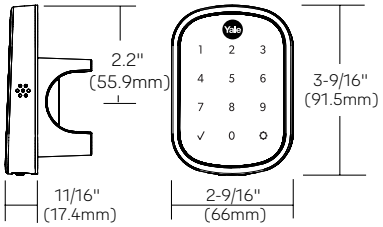

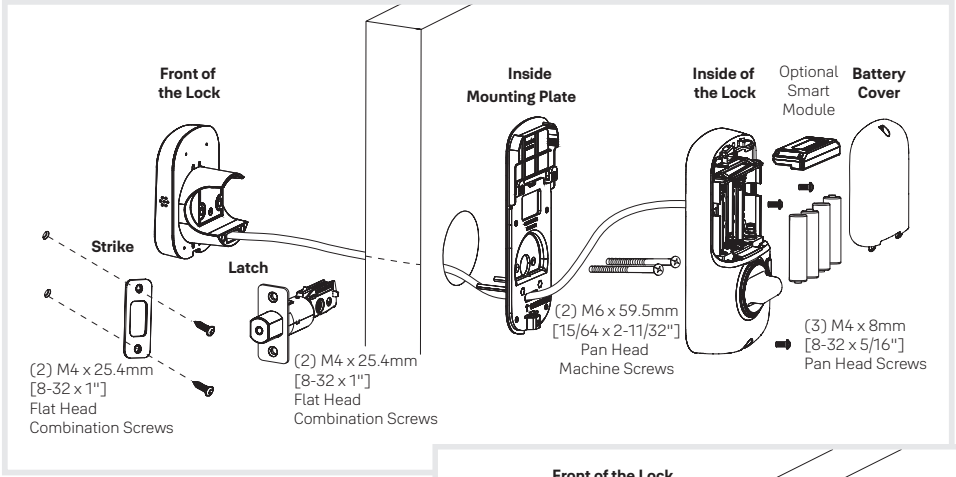

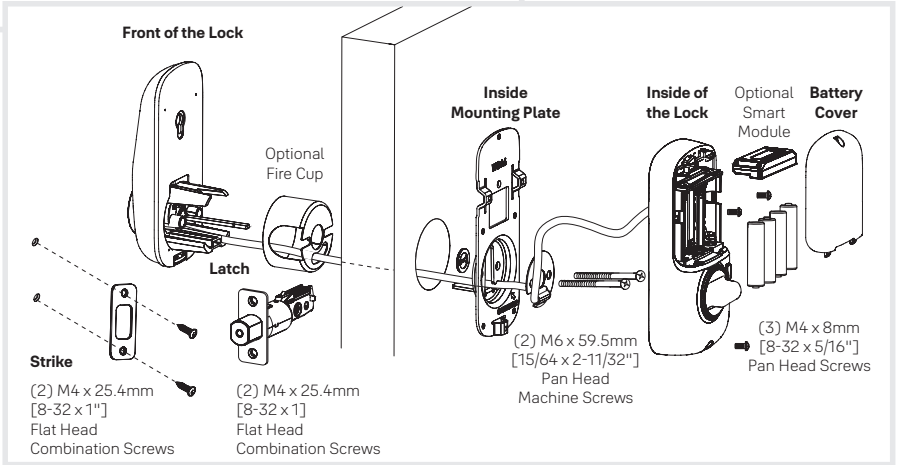

Contact Support
1-855-213-5841
support@yalelock.com

Assure Lock®

FUNCTIONS	
NO.	**DESCRIPTION**
YRD216	SINGLE CYLINDER KEYPAD DEADBOLT: Latch operated from outside by electronic keypad interaction, or outside by key, inside by T turn.
YRD226/622	SINGLE CYLINDER TOUCHSCREEN DEADBOLT: Latch operated from outside by electronic touchscreen interaction, or outside by key, inside by T turn.
YRD256	KEY FREE TOUCHSCREEN DEADBOLT: Latch operated from outside by electronic touchscreen interaction, or inside by T-turn. Use a 9V battery backup on the outside as a override in case the batteries die.

STANDARD CASE QUANTITIES	BOX PACK
YRD216 Deadbolt	6
YRD226 Deadbolt	6
YRD256 Deadbolt	6
YRD622 Deadbolt	6

PRODUCT ORDER STRING FOR ASSURE LOCK	
Example: **YRD256-ZW2-619**	
Keypad Style	**YRD216**: Keyed Keypad Deadbolt **YRD226**: Keyed Touchscreen Deadbolt **YRD256**: Key Free Touchscreen Deadbolt **YRD622**: Keyed Touchscreen Deadbolt w. 90 Minute Fire Rating **YRD642**: Keyless Touchscreen Deadbolt w/90 min fire rating
Technology	**NR:** No Module (Standalone) **ZW2:** Z-Wave Plus **CBA:** Yale Access **HA2:** Zigbee* *Note: Control4 and Creston require proprietary Smart Modules.
Finish	**619:** Satin Nickel **0BP:** Oil Rubbed Bronze Permanent **P05:** Lifetime Brass **BSP:** Black Suede

PRODUCT SPECIFICATIONS	
Door Specs	$2\frac{1}{8}$" Face Bore, 1" Edge Bore $2\frac{3}{8}$" or $2\frac{3}{4}$" Backset
Door Thickness	$1\frac{3}{8}$" to $2\frac{1}{4}$" Note: YRD216 / YRD226 requires thin door gasket to support doors 1 3/8" - 1 3/4"
Strike	1" x $2\frac{1}{4}$" RC (Round Corner)
Latch	$2\frac{3}{8}$" or $2\frac{3}{4}$" Adjustable
Latch Faceplate	1" x $2\frac{1}{4}$" RC (Round Corner)
Keyway YRD216, YRD226 models	Standard: Yale KW-1 5 Pin Brass Cylinder Optional: SC-1, Para 6 pin, SFIC-LC (only YRD226)
Keys YRD216, YRD226	2
Keying YRD216, YRD226	Standard: KD (Keyed Different) Optional: KA (Keyed Alike)
Certified ANSI/BHMA	A156.36 Grade 2 BHMA CERTIFIED
UL/cUL	YRD256 is 20 minute fire rated when installed on the correct rated/specified door YRD216/226 is 20 minute fire rated when installed with the optional fire kit (AYRD-FKIT-<finish>) on the correctly rated/specified door. YRD622 is 90 minute fire rated when installed on the correct rated/specified door.
Windstorm Rating	YRD216, YRD226, YRD256 are windstorm rated when installed with a YH Series Tubular Lockset (Model YH11) w/Knob or Lever YRD622 is windstorm rated when installed with a YH Series Tubular Lockset (Model YH11) w/Knob or Lever
Temperature Range	**Outside Temperature Range:** -30°C to 60°C = -22°F to 140°F **Inside Temperature Range:** -15°C to 70°C = 5°F to 158°F **Battery Temperature Range:** -10°C to 55°C = 14°F to 131°F **Storage Temperature Range:** -40°C to 85°C = -40°F to 185°F
Technology Options Control4 and Crestron require unique Smart Modules	Z-WAVE PLUS zigbee Yale access

Assure Lock®

PRODUCT LIST PRICE

DESIGN		NO	P05[2]	10BP	US15 619	BSP
Keypad Deadbolt	Standalone	**YRD216**	**320.00**	**320.00**	**320.00**	**N/A**
Keypad Deadbolt	Z-Wave/Zigbee[1]	**YRD216**	**455.00**	**455.00**	**455.00**	**N/A**
Keypad Deadbolt	Yale Access	**YRD216**	**636.00**	**636.00**	**636.00**	**N/A**
Touchscreen Deadbolt	Standalone	**YRD226**	**374.00**	**374.00**	**374.00**	**374.00**
Touchscreen Deadbolt	Z-Wave/Zigbee[1]	**YRD226**	**509.00**	**509.00**	**509.00**	**509.00**
Touchscreen Deadbolt	Yale Access	**YRD226**	**690.00**	**690.00**	**690.00**	**690.00**
Key Free Touchscreen	Standalone	**YRD256**	**428.00**	**428.00**	**428.00**	**428.00**
Key Free Touchscreen	Z-Wave/Zigbee[1]	**YRD256**	**563.00**	**563.00**	**563.00**	**563.00**
Key Free Touchscreen	Yale Access	**YRD256**	**744.00**	**744.00**	**744.00**	**744.00**
Touchscreen Deadbolt	Standalone	**YRD622[3]**	**537.00**	**537.00**	**537.00**	**537.00**
Touchscreen Deadbolt	Z-Wave/Zigbee[1]	**YRD622[3]***	**672.00**	**672.00**	**672.00**	**672.00**
Touchscreen Deadbolt	Yale Access	**YRD622[3]**	**853.00**	**853.00**	**853.00**	**853.00**
Touchscreen Deadbolt	Standalone	**YRD642[3]**	**537.00**	**537.00**	**537.00**	**537.00**
Touchscreen Deadbolt	Z-Wave/Zigbee[1]	**YRD642[3]**	**672.00**	**672.00**	**672.00**	**672.00**
Touchscreen Deadbolt	Yale Access	**YRD642[3]**	**853.00**	**853.00**	**853.00**	**853.00**

1 Not Control4 or Crestron compatible.
2 In select instances, P05 may be swapped, based on availability, for 605.
3 UL 90 minutes.
* Can be ordered key-free for no additional charge. Contact your sales rep to order.

Notes:
- Locks ship standard with KW-1 5-Pin keyway Keyed Different. Alternate key options must be ordered as an additional line.
- Available with 90 minute fire rating as YRD622. Please contact your sales team for more information.
- Orders for YRD216 may be converted to NF-YRD612, YRD226 may be converted to NF-YRD622, YRD256 may be converted to YRD652 to help assure on time delivery of product. The alternate product part number is identical in form fit and function.

CYLINDER / ACCESSORY / REPLACEMENT PART LIST PRICE++

DESCRIPTION	PART NO./LIST NO.	FINISH	LIST PRICE
Adjustable Drive-In Latch	AYRDB-DRIVE-26	US26	**14.90**
Adjustable Radius Corner Latch	AYRDB2-619	US15	**14.90**
Adjustable Radius Corner Latch	AYRDB2-0BP	US10BP	**14.90**
Adjustable Radius Corner Latch	AYRDB2-605	US3	**14.90**
Adjustable Radius Corner Latch	AYRDB2-BSP	BSP	**14.90**
Adjustable UL20 Latch	AYRDB-R20-619	619	**14.90**
Brass SC1–5-Pin & 2 Brass Keys, Tailpiece, High Stack, Deadbolt, KD, 26	AYRD200-SCKD-26	US26	**14.10**
Brass SC1-5-Pin & 2 Brass Keys, Tailpiece, High Stack, Deadbolt, KD, 03	AYRD200-SCKD-03	US3	**14.10**
Brass SC1–5-Pin & 2 Brass Keys, Tailpiece, High Stack, Deadbolt, KA, 26	AYRD200-SCKA-26	US26	**14.10**
Brass SC1-5-Pin & 2 Brass Keys, Tailpiece, High Stack, Deadbolt, KA, 03	AYRD200-SCKA-03	US3	**14.10**
Brass KW1-5-Pin & 2 Brass Keys, Tailpiece, High Stack, Deadbolt, KD, 26	AYRD200-KWKD-26	US26	**14.10**
Brass KW1-5-Pin & 2 Brass Keys, Tailpiece, High Stack, Deadbolt, KD, 03	AYRD200-KWKD-03	US3	**14.10**
Brass KW1–5-Pin & 2 Brass Keys, Tailpiece, High Stack, Deadbolt, KA, 26	AYRD200-KWKA-26	US26	**14.10**
Brass KW1-5-Pin & 2 Brass Keys, Tailpiece, High Stack, Deadbolt, KA, 03	AYRD200-KWKA-03	US3	**14.10**
Thin Door Gasket for YRD216 I/S & O/S ESCUTCHEONS (2 PIECES)	AYRDT216-PB-GSK	Black	**3.50**
Thin Door Gasket for YRD226 I/S & O/S ESCUTCHEONS (2 PIECES)	AYRDT226-TS-GSK	Black	**3.50**
Touchscreen SFIC Cylinder Housing	AYRD220-1-0BP++	US10BP	**26.00**
Touchscreen SFIC Cylinder Housing	AYRD220-1-619++	US15	**26.00**
Deadbolt Para Cylinder, KD	AYRD200-PAKD-26	US26	**26.00**
Deadbolt Para Cylinder, KA	AYRD200-PAKA-26	US26	**26.00**
Deadbolt Para Cylinder, KD	AYRD200-PAKD-03	US3	**26.00**
Deadbolt Para Cylinder, KA	AYRD200-PAKA-03	US3	**26.00**
Technology Options: Upgrade a standalone lock			
HA2 Zigbee Smart Module	AYR202-ZB-HA		**235.00**
ZW2 Z-Wave Plus Smart Module	AYR202-ZWV-USA		**235.00**
Yale Wi-Fi Smart Module for Assure Locks and Levers	R-AYR-MOD-WF1-USA		**190.00**
4 1/4" Wide Plexiglass YRL Mount	AYR-425-MNT		**120.00**
UL 20 Minute YRD Fire Kit 619	AYRD-FKIT-619		**45.00**
UL 20 Minute YRD Fire Kit 0BP	AYRD-FKIT-0BP		**45.00**
UL 20 Minute YRD Fire Kit 605	AYRD-FKIT-605		**45.00**

NOTE: The SFIC housing option is shipped less core. Small Format Interchangeable Cores can be ordered from the Yale Commercial Catalog. **Yale Assure cylinders are not Builder Key compatible.**
++Item is an upcharge to packaged list pricing

Assure Lever®

Assure Lever Keypad
YRL216

Assure Lever Touchscreen
YRL226

Introducing the new Assure Levers, the sleekest and most convenient electronic lever locks on the market. Available in standalone or with a Yale Smart Module for seamless integration into your smart home or security system.

- Available in standalone, Z-Wave or works with the Yale Access App.
- Backlit keypads make day-to-day access, effortless.
- Simple installation requires only a screwdriver.
- Keypads wake with a touch and feature backlit numbers that won't wear off.
- Features a 9V battery back-up to prevent lockouts.

NOTE: Yale Assure Levers® ship from the QuickShip warehouse in Berlin, CT Only. Freight minimums are separate from AAG Factory items.

Assure Lever®

Touchscreen Lever Exterior

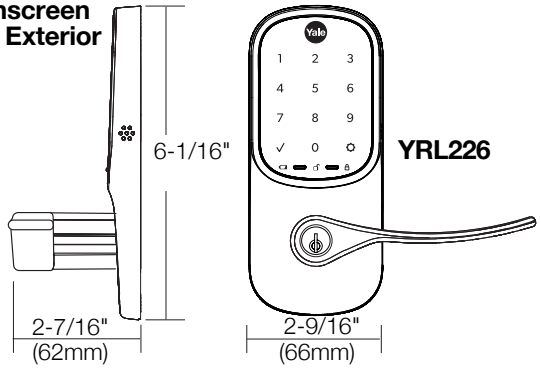

YRL226

Keypad Lever Exterior

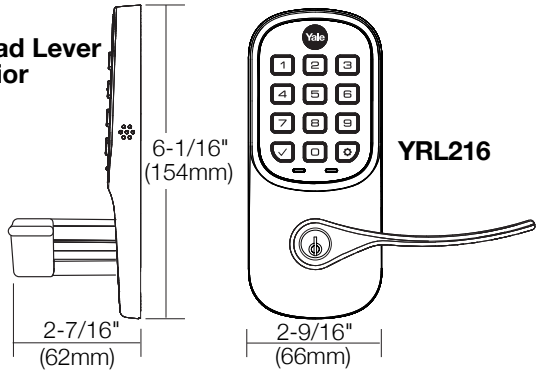

YRL216

Lever Interior
shown with battery cover removed

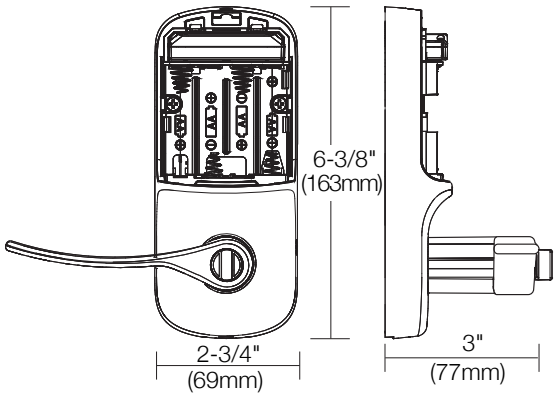

Front of the Lock

Inside Mounting Plate

Inside of the Lock

Battery Cover

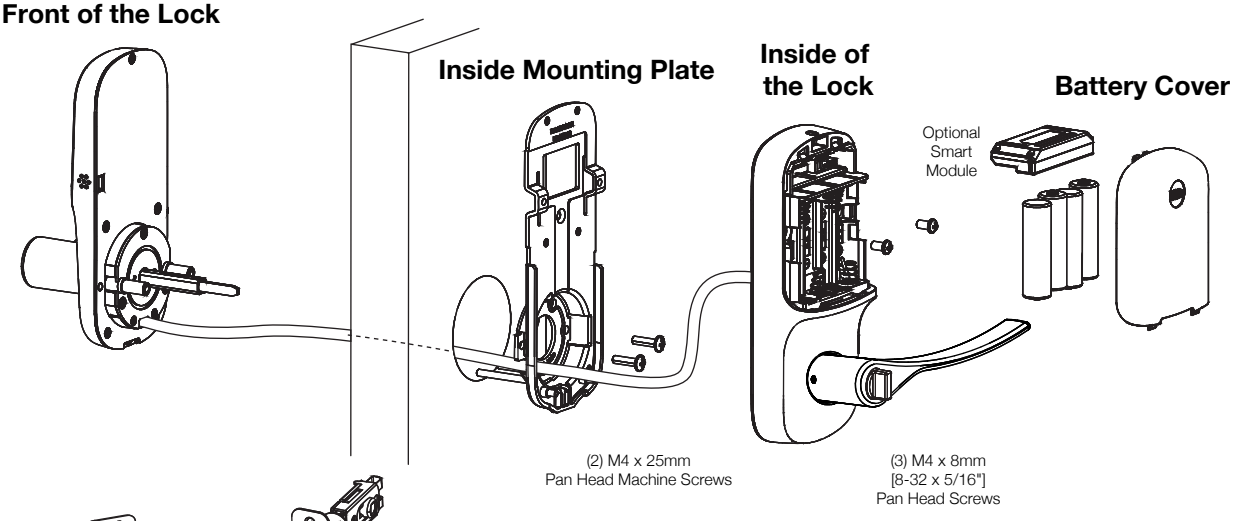

Contact Support
1-855-213-5841 support@yalelock.com

Assure Lever®

FUNCTIONS	
NO.	**DESCRIPTION**
YRL216	KEYED KEYPAD LEVER: Lever operated from outside by electronic keypad interaction or by physical key, inside by lever.
YRL226	KEYED TOUCHSCREEN LEVER: Lever operated from outside by electronic touchscreen interaction or by physical key, inside by lever.

STANDARD CASE QUANTITIES	BOX PACK
Keypad Lever	6
Touchscreen Lever	6

PRODUCT ORDER STRING FOR ASSURE LEVER	
Example: **YRL216-ZW2-619**	
Keypad Style	**YRL216**: Keyed Keypad Lever **YRL226**: Keyed Touchscreen Lever
Technology	**NR:** No Module (Standalone) **ZW2:** Z-Wave Plus **CBA:** Yale Access
Finish	**619:** Satin Nickel **0BP:** Oil Rubbed Bronze Permanent **605:** Brass **BSP:** Black Suede

PRODUCT SPECIFICATIONS	
Door Specs	2⅛" Face Bore,1" Edge Bore 2⅜" or 2¾" Backset
Door Thickness	1⅜" to 1¾"
Strike	1⅛" x 2¾" Full Lip RC (Round Corner)
Latch	2⅜" or 2¾" Adjustable
Latch Faceplate	1" x 2¼" RC (Round Corner)
Keyway	YRL216/YRL226 KW Keyway 5 Pin KW-1
YRL216/YRL226	1 Key
YRL216/YRL226	KD Standard
Certified ANSI/BHMA	A156.2 Grade 2 BHMA CERTIFIED
Temperature Range	**Outside Temperature Range:** -30°C to 60°C = -22°F to 140°F **Inside Temperature Range:** -15°C to 70°C = 5°F to 158°F **Battery Temperature Range:** -10°C to 55°C = 14°F to 131°F **Storage Temperature Range:** -40°C to 85°C = -40°F to 185°F
Technology Options Control4 and Crestron require unique Modules.	Z-WAVE PLUS, Yale access

PRODUCT LIST PRICE					
DESIGN	**NO**	**US3 605***	**10BP**	**US15 619**	**BSP**
Keypad Lever Standalone	**YRL216**	**374.00***	**374.00**	**374.00**	374.00
Keypad Lever Z-Wave Plus	**YRL216**	**509.00***	**509.00**	**509.00**	509.00
Keypad Lever Yale Access	**YRL216**	**690.00***	**690.00**	**690.00**	690.00
Touchscreen Lever Standalone	**YRL226**	**428.00***	**428.00**	**428.00**	428.00
Touchscreen Lever Z-Wave Plus	**YRL226**	**563.00***	**563.00**	**563.00**	563.00
Touchscreen Lever Yale Access	**YRL226**	**744.00***	**744.00**	**744.00**	744.00

Assure Lever®
Key Free Lever Options

PRODUCT LIST PRICE				
DESIGN	**NO**	**US3**	**10BP**	**US15**
Academy (standard)	**YR05D87**	**36.00**	**36.00**	**36.00**
Marina	**YR05D84**	**36.00**	**36.00**	**36.00**
McClure	**YR05D85**	**36.00**	**36.00**	**36.00**
Milan	**YR05D83**	**36.00**	**36.00**	**36.00**
Norwood	**YR05D88**	**36.00**	**36.00**	**36.00**

Customize your Key Free or Keyed Assure Lever Lock with one of these lever styles in Polished Brass, Oil Rubbed Bronze Permanent, or Satin Nickel

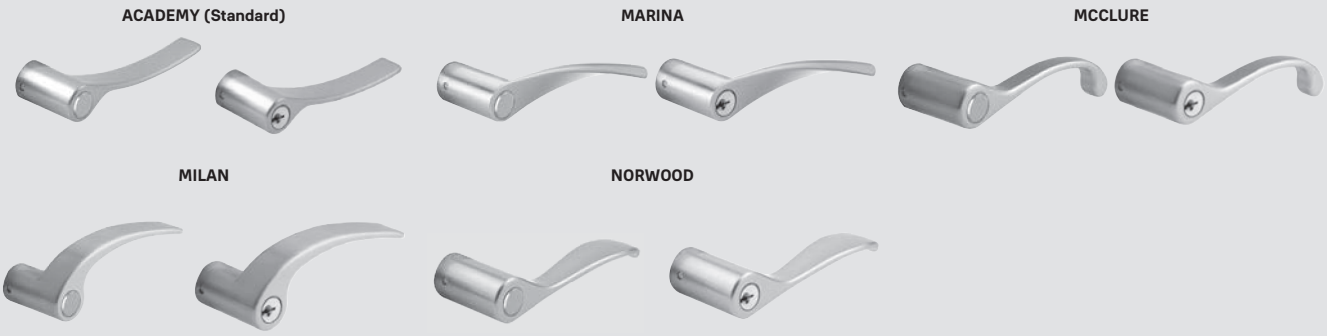

CYLINDER / ACCESSORY / REPLACEMENT PART LIST PRICE			
DESCRIPTION	**PART NO./LIST NO.**	**FINISH**	**LIST PRICE**
Adjustable Drive-In Latch	AYRL-DRIVE-26	US26	**14.90**
Adjustable Radius Corner Latch	AYRL-LATCH-15	US15	**14.90**
Adjustable Radius Corner Latch	AYRL-LATCH-10B	US10BP	**14.90**
Adjustable Radius Corner Latch	AYRL-LATCH-03	US3	**14.90**
Technology Options: Upgrade a standalone lock			
ZW2 Z-Wave Plus Module	AYR202-ZWV-USA		**235.00**
Yale Wi-Fi Smart Module for Assure Locks and Levers	R-AYR-MOD-WF1-USA		**190.00**
4 1/4" Wide Plexiglass YRL Mount	AYR-425-MNT		**120.00**
Brass SC1–5-Pin & 2 Brass Keys, Tailpiece, High Stack, Entry, KD, 26	AYRL-2X6-SCKD-26	US26	**14.10**
Brass SC1-5-Pin & 2 Brass Keys, Tailpiece, High Stack, Entry, KD, 03	AYRL-2X6-SCKD-03	US3	**14.10**
Brass SC1–5-Pin & 2 Brass Keys, Tailpiece, High Stack, Entry, KA, 26	AYRL-2X6-SCKA-26	US26	**14.10**
Brass SC1-5-Pin & 2 Brass Keys, Tailpiece, High Stack, Entry, KA, 03	AYRL-2X6-SCKA-03	US3	**14.10**
Brass KW1-5-Pin & 2 Brass Keys, Tailpiece, High Stack, Entry, KD, 26	AYRL-2X6-KWKD-26	US26	**14.10**
Brass KW1-5-Pin & 2 Brass Keys, Tailpiece, High Stack, Entry, KD, 03	AYRL-2X6-KWKD-03	US3	**14.10**
Brass KW1–5-Pin & 2 Brass Keys, Tailpiece, High Stack, Entry, KA, 26	AYRL-2X6-KWKA-26	US26	**14.10**
Brass KW1-5-Pin & 2 Brass Keys, Tailpiece, High Stack, Entry, KA, 03	AYRL-2X6-KWKA-03	US3	**14.10**

NOTES:
The SFIC (Small Format Interchangeable Core) is not available. Cylinders are not **Builder Key compatible.**
Cylinders/Keyways for YRL216 and YRL226

Assure Lock®
for Andersen® patio doors‡

‡ Available on select hinged doors, see your supplier for details.

Exterior

Interior

The Yale Assure Lock® for Andersen hinged patio and entry doors features a sleek design and allows you to monitor, lock and unlock your door from anywhere so you never have to worry about carrying or losing keys again. This lock is compatible with the A-Series Hinged Patio Doors, E-Series Patio Doors (March 2018 and newer), Entry Doors and Folding Patio Doors.

NOTE: Yale Assure Lock® for Andersen® patio doors‡ ship from the QuickShip warehouse in Berlin, CT Only. Freight minimums are separate from AAG Factory items.

Exterior Touchscreen

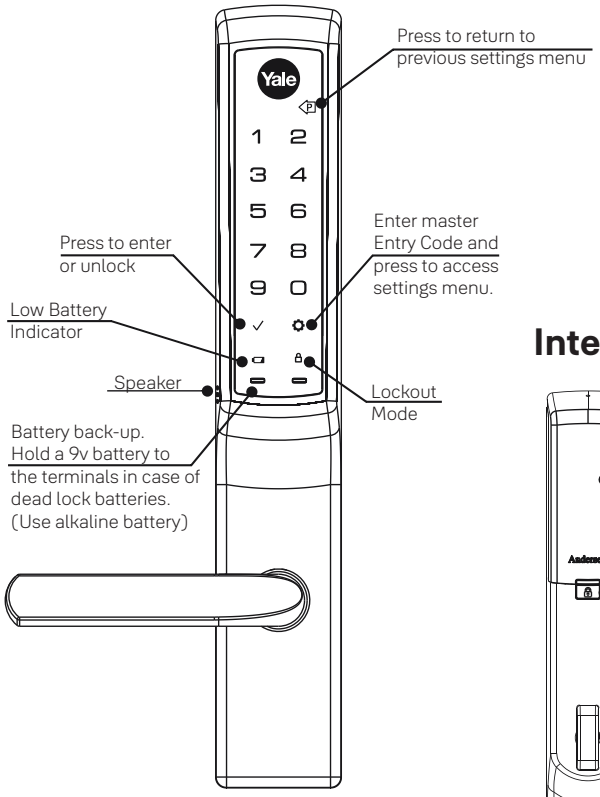

Interior

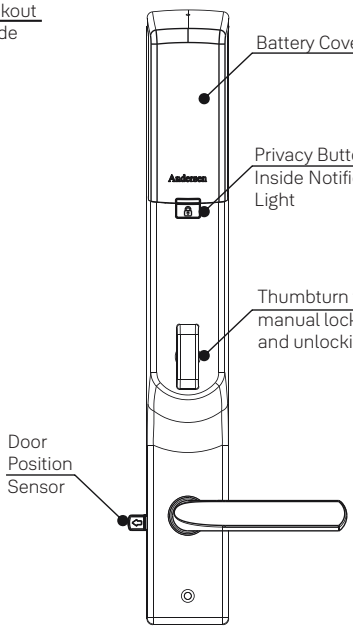

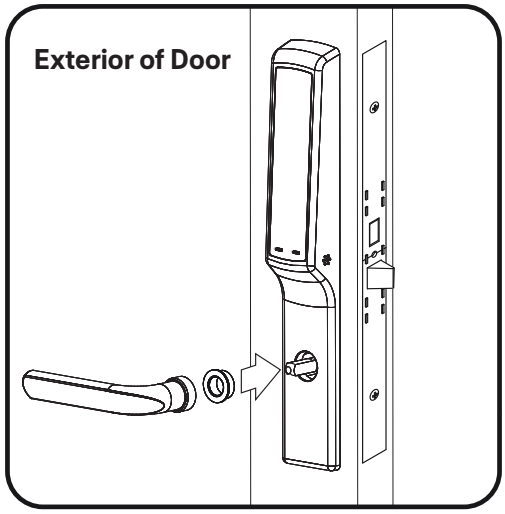

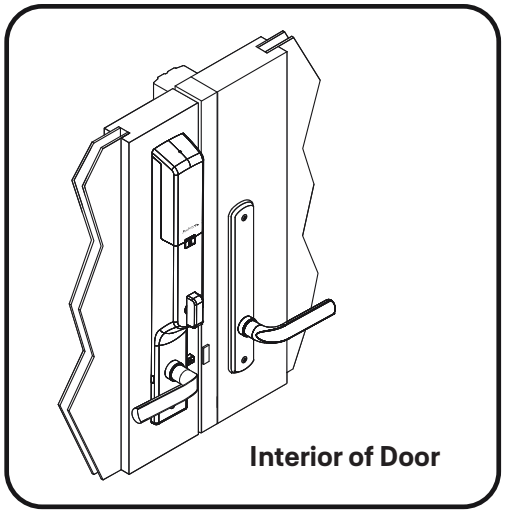

Contact Support
1-855-213-5841 support@yalelock.com

Assure Lock®
for Andersen® patio doors‡

‡ Available on select hinged doors, see your supplier for details.

FUNCTIONS

NO.	DESCRIPTION
YRM276	KEY FREE TOUCHSCREEN DEADBOLT: Latch operated from outside by electronic touchscreen interaction, or inside by T-turn. Use a 9V battery backup on the outside as a override in case the batteries die.

STANDARD CASE QUANTITIES	BOX PACK
YRM276	4

PRODUCT SPECIFICATIONS

Inside The Box	• Assure Lock for Anderson Patio Doors • 4 AA Alkaline Batteries • Handle Kit • Mounting Hardware and Strike • Door Template • Installation Manual • Optional Network Module
Compatibility	Yale Assure Lock can be ordered with these new Andersen products. • A-Series Hinged Patio Doors • E-Series Hinged Ption Doors • Complementary Curved Top Patio Doors • Entranceway Doors
Warranty	For the original owner, one year warranty for electronics and lifetime limited warranty for finish and mechanical operation.
Batteries	4 AA Alkaline Batteries (Included)
Handing	Reversible; Self-handing (Please hand while in unlocked position)
Technology	

PRODUCT ORDER STRING FOR ASSURE® LOCK FOR ANDERSEN® PATIO DOORS

Example: **YRM276-NR-619**	
Model	**YRM276:** Assure Lock® for Andersen® Patio Doors
Technology	**NR:** No Module (Standalone) **ZW2:** Z-Wave **CBA:** Wi-Fi & Bluetooth
Finish	**619:** Satin Nickel **WHT:** White **BLK:** Black

PRODUCT SKU	FINISH	TECHNOLOGY	LIST PRICE
YRM276-NR-619	Satin Nickel	Standalone	935.00
YRM276-NR-BLK	Black	Standalone	935.00
YRM276-NR-WHT	White	Standalone	935.00
YRM276-ZW2-619	Satin Nickel	Z-Wave Plus	1065.00
YRM276-ZW2-BLK	Black	Z-Wave Plus	1065.00
YRM276-ZW2-WHT	White	Z-Wave Plus	1065.00
YRM276-CBA-619	Satin Nickel	Yale Access	1250.00
YRM276-CBA-BLK	Black	Yale Access	1250.00
YRM276-CBA-WHT	White	Yale Access	1250.00

Assure Lock® Interconnected

Assure Lock Interconnected
YRC216

Assure Lock Interconnected
YRC226/YRC622

Assure Lock Interconnected
YRC256

Assure Lock Interconnected combines electronic deadbolts with the convenience of a passage lever for panic proof egress. From the inside, both the latchbolt and the deadbolt are retracted simultaneously in a single motion for a quick and easy exit. Available in standalone, Z-Wave or Zigbee configurations.

Available with 90 minute fire rating as YRC622. Please contact your sales team for more information.

Assure Lock® Interconnected

STYLES

STYLE	NO.	DESCRIPTION
	YRC216	Single point lock. Latchbolt is operated by either lever at all times. Deadbolt activated by touchscreen or key on outside or by thumbturn on inside. Interior lever retracts latch and deadbolt simultaneously.
	YRC226/622	Single point lock. Latchbolt is operated by either lever at all times. Deadbolt activated by touchscreen or key on outside or by thumbturn on inside. Interior lever retracts latch and deadbolt simultaneously.
	YRC256	Single point lock. Latchbolt is operated by either lever at all times. Deadbolt activated by touchscreen or by thumbturn on inside. Interior lever retracts latch and deadbolt simultaneously.

DIMENSIONS	A	B	C	D	WIDTH
Based on Woodland Lever					
PASSAGE					
Lever	10⅝" 12⅛"	2⅝"	2½"	4" 5½"	2¹³⁄₁₆"
ENTRY					
Lever	10⅝" 12⅛"	2⅝"	2½"	4" 5½"	2¹³⁄₁₆"

Mechanical View

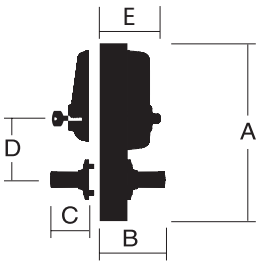

PRODUCT SPECIFICATIONS

Door Specs	2⅛" Face Bore, 1" Edge Bore, 4" or 5½" Center to Center* *Must specify
Backset	2⅜" (60mm) or 2¾" (70mm)
Door Thickness	1⅜" (35mm) to 1¾" (44mm)
Cylinder	KW-1 Compatible standard, other cylinders/keyways available to order. SFIC optional.
Keying	KD (Keyed Different) standard, master keying available to order Other Keying options see page 86
Latch Faceplate	1" (25mm) W x 2¼" (57mm) H; Round Corner standard, Square Corner available to order
Strike	Lever: 2¼" (57mm) Full Lip, Deadbolt Strike: 1" x 2¼"; Round Corner standard, other strikes available to order.
Windstorm Rating	YRC216, YRC226, YRD256 are windstorm rated when installed with a YH Series Tubular Lockset (Model YH11). YRC622 is windstorm rated when installed with a YH Series Tubular Lockset (Model YH11).
Certified ANSI/BHMA	A156.12, Grade 2 BHMA certified
UL/cUL	YRC200 - listed for 20 min fire doors and windstorm applications YRC600 - listed for 90 min fire doors and windstorm applications UL
Technology Options **Control4 and Crestron require unique Modules.**	Z-WAVE PLUS zigbee

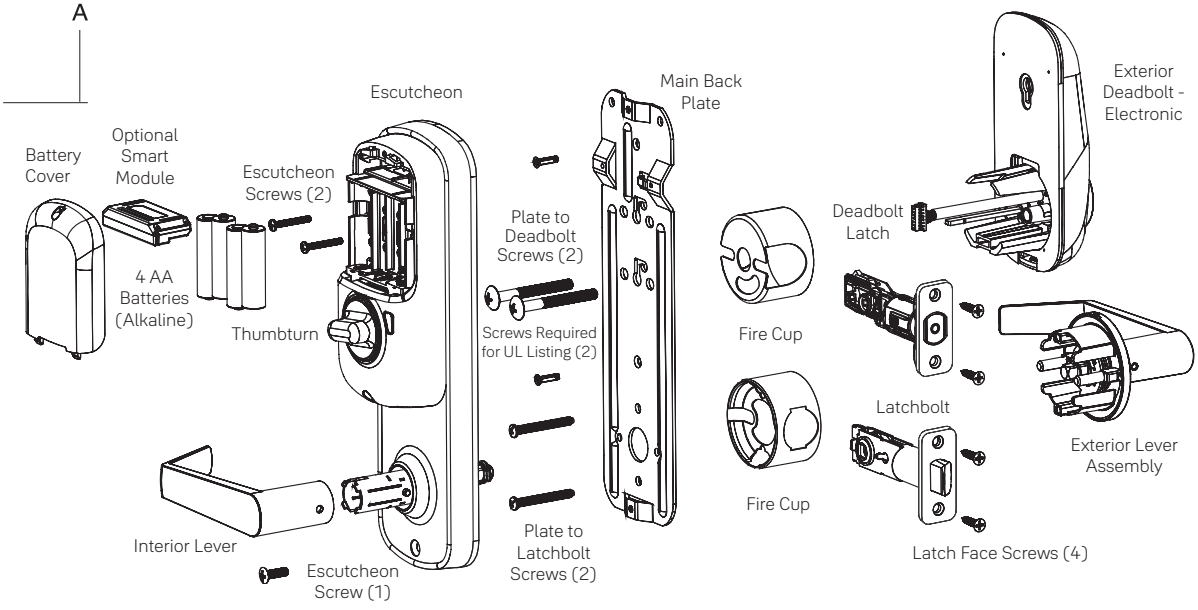

Assure Lock® Interconnected

BOX PACK LIST PRICE						
Interconnected Available lever styles shown below. Yale Real Living YRC216, YRC226 (KW standard); see below for keying options	**DESIGN**	**Z-Wave, Zigbee, Standalone**	**P05** **Note: orders over 5 pieces need to be ordered factory direct and require longer lead times**	**US15 619**	**10BP**	**BSP**
YRC216 Interconnected	Keypad	ZW2/HA2	657.00	**657.00**	657.00	N/A
YRC216 Interconnected	Keypad	Standalone	527.00	**527.00**	527.00	N/A
YRC226 Interconnected	Touchscreen	ZW2/HA2	734.00	**734.00**	734.00	734.00
YRC226 Interconnected	Touchscreen	Standalone	604.00	**604.00**	604.00	604.00
YRC256 Interconnected	Key Free	ZW2/HA2	789.00	789.00	789.00	789.00
YRC256 Interconnected	Key Free	Standalone	659.00	659.00	659.00	659.00
YRC622 Interconnected	Key Free	ZW2/HA2	845.00	845.00	845.00	845.00
YRC622 Interconnected	Key Free	Standalone	715.00	715.00	715.00	715.00

Notes:
- For lever finish availability see YH pages 48-52.
- Available with 90 minute fire rating as YRC620. Please contact your sales team for more information.
- Orders for YRC216 may be converted to NF-YRC612, YRC226 may be converted to NF-YRC622, YRC256 may be converted to YRC652 to help assure on time delivery of product. The alternate product part number is identical in form fit and function.

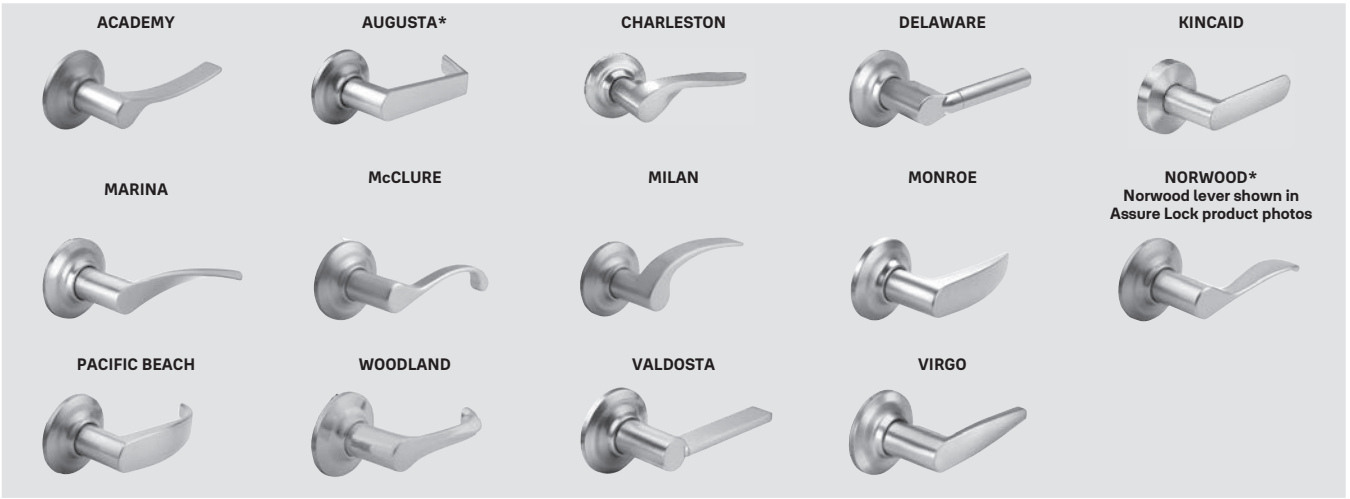

*Augusta, Norwood available in QuickShip.

INTERCONNECTED PASSAGE LEVER PAIRS++		
Design	**Part #**	
Academy (Passage lever Pair)	YR05D67*	36.00
Augusta (Passage lever Pair)	YR05D66*	36.00
Delaware (Passage lever Pair)	YR05D6D*	36.00
Kincaid (Passage lever pair)	YR05D6K*	36.00
Marina (Passage lever Pair)	YR05D64*	36.00
McClure (Passage lever Pair)	YR05D65*	36.00
Milan (Passage lever Pair)	YR05D63*	36.00
Monroe (Passage lever Pair)	YR05D6W*	36.00
Norwood (Passage lever Pair)	YR05D68*	36.00
Pacific Beach (Passage lever Pair)	YR05D62*	36.00
Valdosta (Passage lever Pair)	YR05D6V*	36.00
Virgo (Passage lever Pair)	YR05D61*	36.00
Woodland (Passage lever Pair)	YR05D69*	36.00

OPTIONS		
Less Cylinder (LC)	0.00 No deductions	
SFIC (LC only) Note: SFIC is not available for YRC216	0.00 No deductions	Lock SFICLC only. A600 or K600 available thru YC, should be listed as a separate line item. To order specify SFIC.
Para Keyway	0.00 No adder	

NOTE: See page 85 (For Interconnects add ICN to above part numbers (Adds Longer Interconnect tailpiece)

Latches, Latchbolts, Cylinders see page 13,17.

++Ships Norwood standard. Upcharge Quickship. Flashship orders. Factory standard charge.

Assure Lock® Interconnected

PRODUCT ORDER STRING FOR YALE ASSURE LOCK INTERCONNECTED	
Example: YRC226-NR-NW-5-619-RC-RC-KWKD	
Keypad Style	**YRC216**: Keyed Pushbutton Interconnected Deadbolt
	YRC226: Keyed Touchscreen Interconnected Deadbolt
	YRC256: Key Free Touchscreen Interconnected Deadbolt
	YRC622: Keyed Touchscreen Interconnected Deadbolt with 90 Minute Fire Rating
Smart Module	**NR***: No Module (Standalone)
	ZW2: Z-Wave Plus
	HA2: Zigbee
Lever Style	**AC**: Academy (Passage Lever Pair)
	AU: Augusta (Passage Lever Pair)
	CH: Charleston (Passage Lever Pair)
	DW: Delaware (Passage Lever Pair)
	KC: Kincaid (Passage Lever Pair)
	MA: Marina (Passage Lever Pair)
	MC: McClure (Passage Lever Pair)
	MN: Milan (Passage Lever Pair)
	MO: Monroe (Passage Lever Pair)
	NW*: Norwood (Passage Lever Pair)
	PB: Pacific Beach (Passage Lever Pair)
	VL: Valdosta (Passage Lever Pair)
	VG: Virgo (Passage Lever Pair)
	WL: Woodland (Passage Lever Pair)
Bore Hole Configuration	**4**: 4" Center to Center Borehole
	5: 5.5" Center to Center Borehole
Finish	**619**: Satin Nickel
	0BP: Oil Rubbed Bronze
	P05: Lifetime Brass
Latch/Deadbolt Face Plate Style	**RC***: Radius Corner Latch
	SC: Square Corner Latch
Strike Plate Style	**RC***: Radius Corner Strike
	SC: Square Corner Strike
Keyway Option	**KWKD***: Kwikset Keyed Different
	KWKA: Kwikset Keyed Alike
	SCKD: Schlage C Keyed Different
	SCKA: Schlage C Keyed Alike
	SFIC: Small Format Interchangeable Less Cylinder
	PARA: Yale Para Keyway

***If not specified product will ship with this option**

Yale Pro® SL
Key Free Entry Deadbolts

Yale Pro SL Keypad
YRD136

Yale Pro SL Touchscreen
YRD156

The Yale Pro SL is a key-free deadbolt with Z-Wave Plus built in. It replaces a standard deadbolt in minutes using just a screwdriver and can be added to dozens of Z-Wave smart home and alarm systems with one-touch enrollment. Get the premium Yale design and features seen in retail, at a lower cost for the pro channel.

- The lock is 100% key free so it can't be picked and there's no keys to lose.
- Available with a backlit touchscreen or keypad
- To prevent lockouts due to dead batteries, there is a 9V battery terminal located below the keypad.
- The lock has a backlit, keypad that wakes with a touch and has numbers that won't wear off.

NOTE: Yale Pro® SL Deadbolts ship from the QuickShip warehouse in Berlin, CT Only. Freight minimums are separate from AAG Factory items.

Yale Pro® SL
Key Free Entry Deadbolts

Yale Pro SL
Keypad
YRD136
Exterior

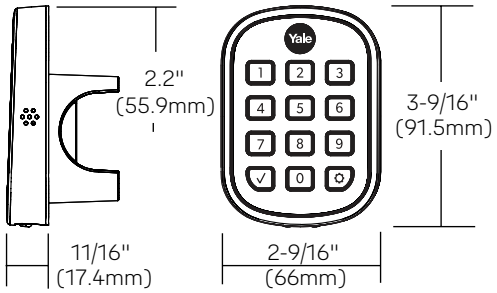

Yale Pro SL
Keypad
YRD156
Exterior

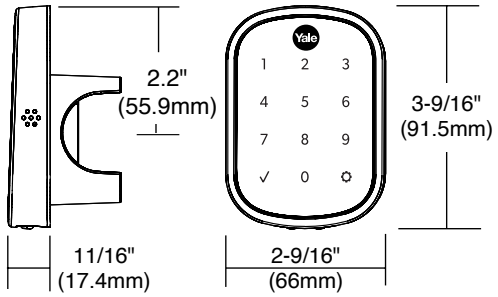

YRD136/156 Lock Interior
shown with battery cover removed

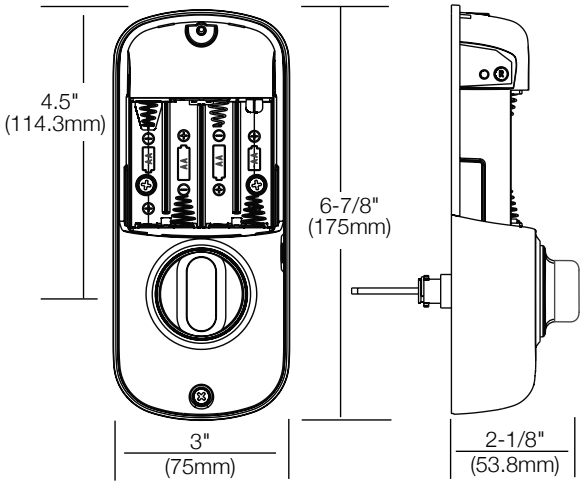

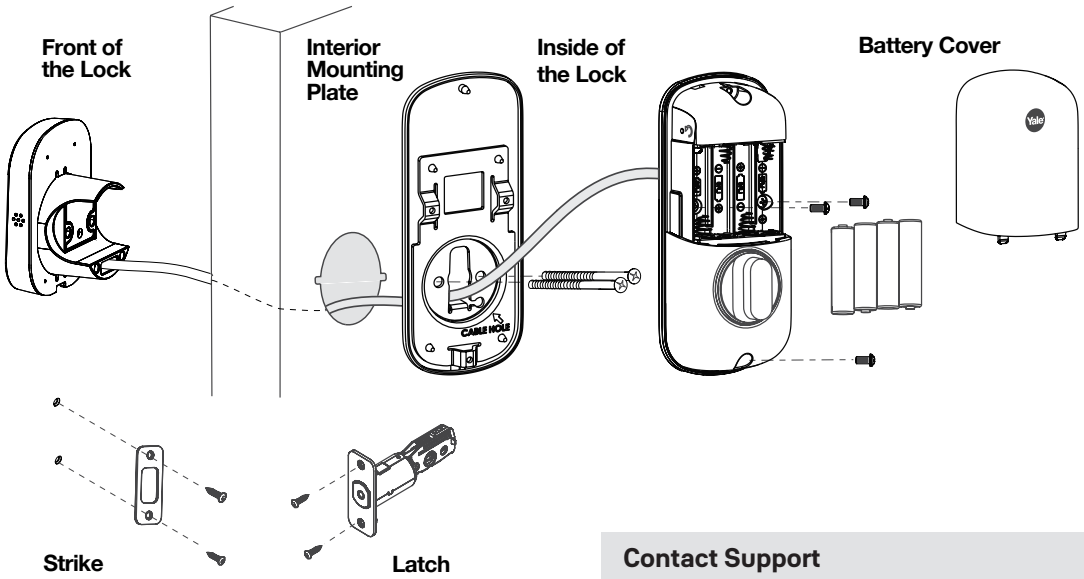

Contact Support
1-855-213-5841 support@yalelock.com

Yale Pro® SL
Key Free Entry Deadbolts

FUNCTIONS	
NO.	**DESCRIPTION**
YRD156	KEY FREE TOUCHSCREEN DEADBOLT: Latch operated from outside by electronic touchscreen interaction, or inside by T-turn. Use a 9V battery backup on the outside as a override in case the batteries die.
YRD136	KEY FREE KEYPAD DEADBOLT: Latch operated from outside by electronic keypad interaction, or inside by T-turn. Use a 9V battery backup on the outside as a override in case the batteries die.

STANDARD CASE QUANTITIES	BOX PACK
YRD136/YRD156	6

PRODUCT SPECIFICATIONS	
Door Specs	2⅛" or 1½" Face Bore 2⅜" or 2¾" Backset
Door Thickness	1⅜"* to 2¼"
Strike	1" x 2¼" RC (Round Corner)
Latch	2⅜" or 2¾" Adjustable
Latch Faceplate	1" x 2¼" RC (Round Corner)
Keyway	Key Free
Certified ANSI/BHMA	A156.36 Grade 2 BHMA CERTIFIED
Temperature Range	**Outside Temperature Range:** -30°C to 60°C = -22°F to 140°F **Inside Temperature Range:** -15°C to 70°C = 5°F to 158°F **Battery Temperature Range:** -10°C to 55°C = 14°F to 131°F **Storage Temperature Range:** -40°C to 85°C = -40°F to 185°F
Technology	Z-WAVE PLUS

PRODUCT ORDER STRING FOR YALE PRO SL	
Example: **YRD156-ZW2-619**	
Keypad Style	**YRD136:** Key Free Keypad
	YRD156: Key Free Touchscreen
Technology	**ZW2:** Z-Wave Plus
Finish	**619:** Satin Nickel
	0BP: Oil Rubbed Bronze Permanent
	605: Polished Brass
	BSP: Black Suede

Note: Orders for YRD136 may be converted to YRD137, YRD156 may be converted to YRD157 to help assure on time delivery of product. The alternate product is identical in form fit and function.

Yale Pro® SL
Key Free Entry Deadbolts

		PRODUCT LIST PRICE				
DESIGN	**NO**	**US3 605**	**10BP**	**US15 619**	**BSP**	**P05**
Yale Pro SL Keypad Z-Wave Plus	**YRD136**	**401.00**	**401.00**	**401.00**	**401.00**	**401.00**
Yale Pro SL Touchscreen Z-Wave Plus	**YRD156**	**454.00**	**454.00**	**454.00**	**454.00**	**454.00**

CYLINDER / ACCESSORY / REPLACEMENT PART LIST PRICE++			
DESCRIPTION	**PART NO./LIST NO.**	**FINISH**	**LIST PRICE**
Adjustable Drive-In Latch	AYRD-DR-SML-619	US26	**14.90**
Adjustable Radius Corner Latch	AYRD-RC-SML-619	US15	**14.90**
Adjustable Radius Corner Latch	AYRD-RC-SML-0BP	US10BP	**14.90**
Adjustable Radius Corner Latch	AYRD-RC-SML-605	US3	**14.90**
4 1/4" Wide Plexiglass YRL Mount	AYR-425-MNT		**120.00**

Nest x Yale Lock

Nest x Yale Lock
The lock for a more secure Nest home.

Nest x Yale Lock combines Yale's 180 years of experience making the world's strongest locks with Nest's industry-leading connected home technology. The result? A lock that's secure, convenient and connected.

- Never worry about keys getting lost, copied or stolen again.
- Create passcodes for friends and family and revoke them anytime.
- Alerts keep you posted on comings and goings.
- Forget to lock the door? No problem. Nest x Yale Lock can lock itself.
- Lock and unlock your door from your phone, from anywhere.
- Hands full? Lock the door with a quick tap
- Lock and check current status by asking Hey Google

works with Hey Google

Touchscreen Keypad Deadbolt Exterior

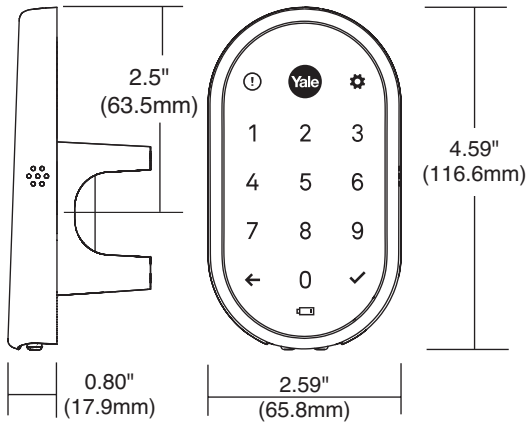

Interior Deadbolt

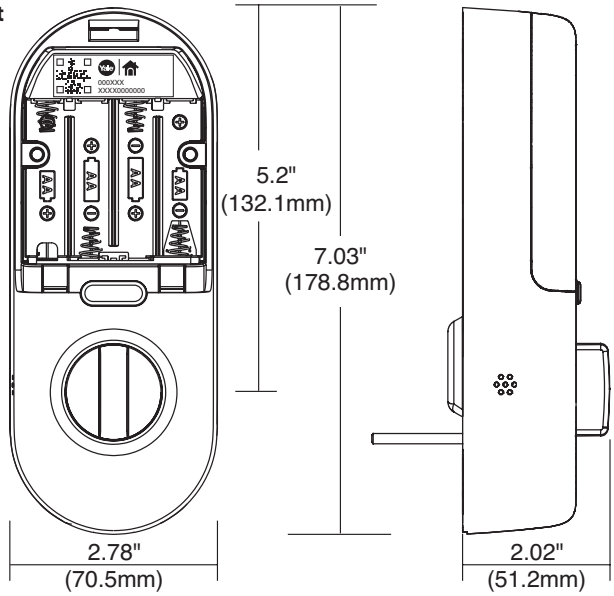

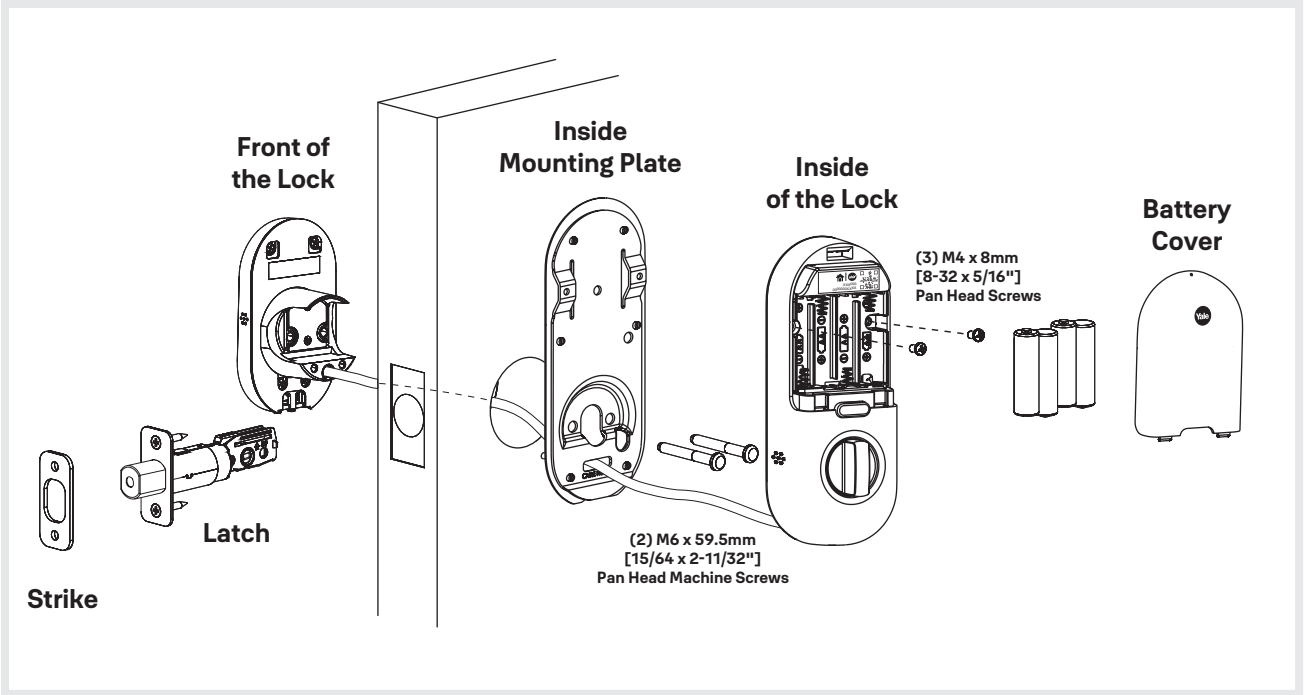

Contact Support
1-855-213-5841 support@yalelock.com

Nest x Yale Lock

FUNCTIONS	
NO.	**DESCRIPTION**
YRD 540	KEY FREE TOUCHSCREEN DEADBOLT: Latch operated from outside by electronic touchscreen interaction, or inside by T-turn. Use a 9V battery backup on the outside as a override in case the batteries die.

STANDARD CASE QUANTITIES	BOX PACK
YRD540 Deadbolt	6
RB-YRD540 Deadbolt and Connect	2

PRODUCT SPECIFICATIONS	
Door Specs	2⅛" Face Bore,1" Edge Bore 2⅜" or 2¾" Backset
Door Thickness	$1^{3}/_{8}$" to $2^{1}/_{4}$" thick
Strike	1" x 2¼" RC (Round Corner)
Latch	2⅜" or 2¾" Adjustable
Latch Faceplate	1" x 2¼" RC (Round Corner)
Certified ANSI/BHMA	A156.36 Grade 2 BHMA CERTIFIED
Temperature Range	**Outside Temperature Range:** -30°C to 60°C = -22°F to 140°F **Inside Temperature Range:** -15°C to 70°C = 5°F to 158°F **Battery Temperature Range:** -10°C to 55°C = 14°F to 131°F **Storage Temperature Range:** -40°C to 85°C = -40°F to 185°F
Technology Options	Weave

PRODUCT ORDER STRING FOR NEST X YALE LOCK	
Example: **YRD540-WV-619**	
Model	**YRD540:** Nest x Yale Lock Standalone
	RB-YRD540: Nest x Yale Lock with Connect
Technology	**WV:** Weave
Finish	**619:** Satin Nickel
	OBP: Oil Rubbed Bronze Permanent
	BSP: Black Suede

Nest x Yale

PRODUCT LIST PRICE				
DESIGN	**NO**	**BSP**	**10BP**	**US15 619**
Nest x Yale Lock Weave	**YRD540-WV***	**600.00**	**600.00**	**600.00**
Nest x Yale Lock Weave; Bundled with Nest Connect	**RB-YRD540-WV**	**670.00**	**670.00**	**670.00**

*YRD540-WV should only be ordered if customer already has a Nest Connect

ACCESSORY / REPLACEMENT PART LIST PRICE

DESCRIPTION	PART NO./LIST NO.	FINISH	LIST PRICE
Adjustable Drive-In Latch	**AYRDB-DRIVE-26**	**US26**	**14.90**
Adjustable Radius Corner Latch	**AYRDB2-619**	**US15**	**14.90**
Adjustable Radius Corner Latch	**AYRDB2-0BP**	**US10BP**	**14.90**
Adjustable Radius Corner Latch	**AYRDB2-BSP**	**BSP**	**14.90**
4 1/4" Wide Plexiglass YRL Mount	**AYR-425-MNT**		**120.00**

Yale Smart Storage Solutions

If it's important to you, it's important to us

Yale Smart Cabinet Lock

Secure cabinets or drawers storing medicines, cleaning supplies, liquor or important documents.

- Control using the Yale Access App from anywhere*
- Enable auto-lock to ensure its always secure
- Easily install with adhesive strip
- Know if the cabinet is open or closed
- Glow in the dark emergency escape button with LED
- Mounts to the base or the roof of your cabinet or drawer
- Add the Yale Smart Keypad for phone-free access
- Optional Yale Connect Wi-Fi Bridge

*Away from home access, notifications and voice compatibility require the Yale Connect Wi-Fi Bridge

Yale Smart Delivery Box

DESIGNED BY KINGSLEY PARK

Kent

Brighton

The first smart delivery box that can be managed and monitored from anywhere using your smartphone.

- Control using the Yale Access App from anywhere*
- Know when packages are delivered and rest easy knowing they are secure
- Weigh the box down with sand, or tether it for added security
- Enable auto-lock to ensure its always secure
- Optional insulated cooler for perishable deliveries
- Kent in Manor Gray; Brighton in Carbon Brown

*Away from home access, notifications and voice compatibility require the Yale Connect Wi-Fi Bridge.

Add the Yale Smart Keypad for phone-free access

Yale Smart Storage Solutions

If it's important to you, it's important to us

Smart Cabinet Lock

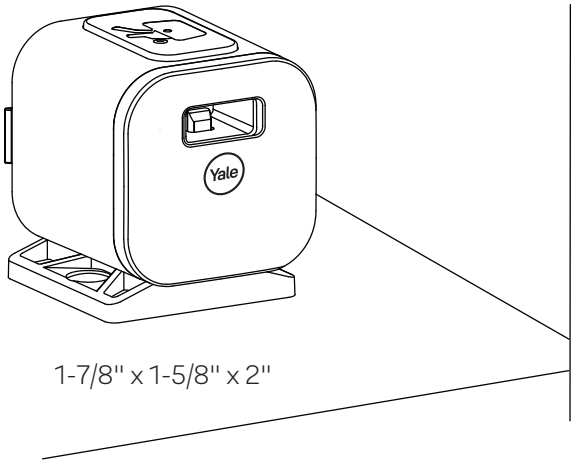

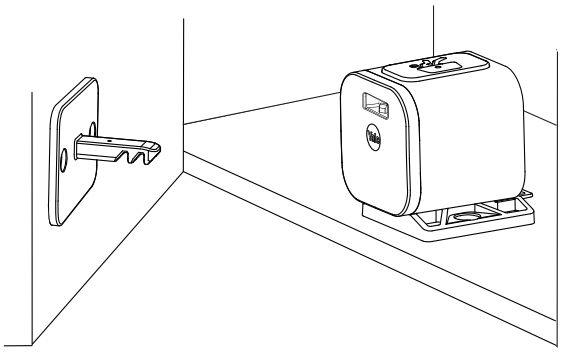

Kent

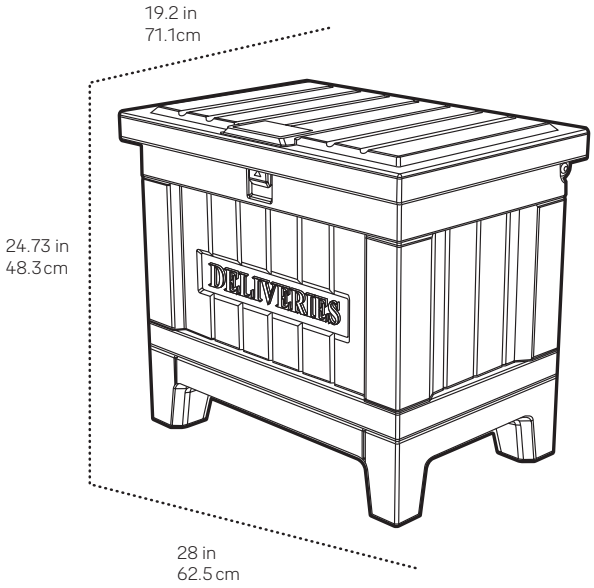

Brighton

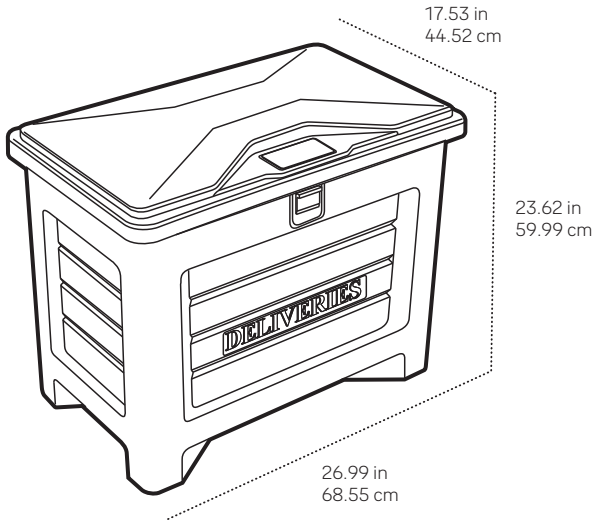

PRODUCT ID	PRODUCT NAME	LIST PRICE
Yale Cabinet Lock		
YRCB-490-BLE-WSP	Yale Smart Cabinet Lock with Bluetooth	184.00
YRCB-490-CB1-WSP	Yale Smart Cabinet Lock + Connect Wi-Fi Bridge	299.00
Yale Delivery Box		
YRBB-MD-KT-CB1-GRY	Yale Smart Delivery Box with Wi-Fi Kent	644.00
YRBB-MD-BR-CB1-BWN	Yale Smart Delivery Box with Wi-Fi, Brighton	527.00
YRBB-MD-KT-CB1K-GRY	Yale Smart Delivery Box with Wi-Fi and Smart Keypad, Kent	759.00
YRBB-MD-BR-CB1K-BWN	Yale Smart Delivery Box with Wi-Fi and Smart Keypad, Brighton	642.00
Yale Smart Keypad		
AYR-KP-BLE-GRY	Yale Smart Keypad	141.00

August Home

August Wi-Fi Smart Lock

August Smart Lock + Connect

August Keypad

August Smart Lock

August Wi-Fi Smart Lock
- Lock and unlock your door from anywhere, grant secure access to friends and family, and track who is coming and going, all from the August app.

August Smart Lock + Connect
Secure, keyless entry for your smart home.
- Control and monitor your door from anywhere and give secure digital keys to guests, all from your phone.

August Keypad
Unlock your door with secure codes; create unique entry codes to unlock your August Smart Lock without a traditional key or phone.

August Smart Lock
Keyless entry through Auto-Unlock, your smartphone or Apple Watch.

August Home

STANDARD CASE QUANTITIES	BOX PACK
August Wi-Fi Smart Lock	5
August Smart Lock + Connect	6
August Smart Keypad	10
August Connect	10
August Smart Lock	6

PRODUCT SPECIFICATIONS	
Door Compatibility	Works with most single cylinder deadbolts.
Temperature Range	**Outside Temperature Range:** -30°C to 60°C = -22°F to 140°F **Inside Temperature Range:** -15°C to 70°C = 5°F to 158°F **Battery Temperature Range:** -10°C to 55°C = 14°F to 131°F **Storage Temperature Range:** -40°C to 85°C = -40°F to 185°F
Technology Options	Wi-Fi, Bluetooth August Smart Lock is not Wi-Fi compatible unless paired with August Connect.

PRODUCT LIST PRICE

PRODUCT	PART NO	LIST PRICE
August Wi-Fi Smart Lock (Matte Black)	PRO-AUG-SL05-M01	540.00
August Wi-Fi Smart Lock (Silver)	PRO-AUG-SL05-S01	540.00
August Smart Lock + Connect (Satin Nickel)	AUG-SL04-C03-N04	475.00
August Keypad	AUG-AK01-M01-G01	135.00
August Connect	AUG-AC02	150.00
August Smart Lock (Silver)	AUG-SL04-M01-S04	352.00
August Smart Lock (Matte Black)	AUG-SL04-M01-G04	

Contact Support
1-855-213-5841 support@yalelock.com

YH Collection® Interconnected Mechanical Locksets

Adjustable 4" or 5.5"

YR852 with Premier Deadbolt
with Passage Lever
Exterior

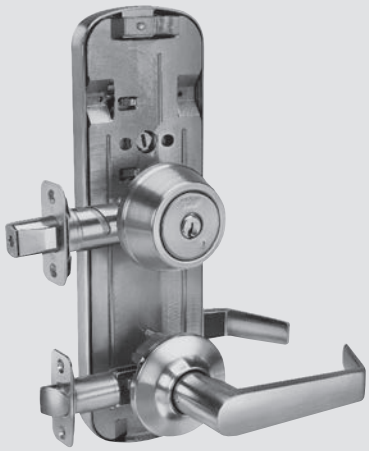

Interior

The new YH Collection Grade 2 Interconnected Mechanical Locksets offer flexible, convenient and stylish security for new or retrofit multi-family applications. The center to center dimension is field-adjustable and installs into most standard door preps. From the inside, latchbolt and deadbolt retract simultaneously for easy egress and the thumbturn quickly secures the opening. Available in two functions with 14 levers in 6 finishes, the Interconnected Mechanical locksets are sure to complement any décor.

YH COLLECTION®

FUNCTIONS

FUNCTION	NO.	DESCRIPTION
	YR852	PASSAGE: Single point lock. Latchbolt is operated by either lever at all times. Deadbolt activated by key on outside; inside by T-turn. Interior lever retracts latch and deadbolt simultaneously.
	YR853	PRIVACY WITH DEADBOLT INDICATOR: Single point lock. Latchbolt is operated by either lever at all times. Deadbolt activated by emergency key on outside; inside by T-turn. Occupancy indicator displays "In Use" when deadbolt thrown or "Vacant" when deadbolt retracted. Interior lever retracts latch and deadbolt simultaneously.

PRODUCT SPECIFICATIONS

Door Specs	2 1/8" Face Bore, 1" Edge Bore, 4" or 5 1/2" Center to Center
Backset	2 3/8" or 2 3/4"
Door Thickness	1 3/8" to 1 3/4"
Cylinder	KW-1 Compatible standard, other cylinders/keyways available to order
Keying	KD (Keyed Different) standard, master keying available to order Other Keying options see page 85
Latch Faceplate	1" W x 2 1/4" H; Round Corner standard, Square Corner available to order
Strike	2 1/4 RC Full Lip & 1 1/8 x 2 3/4 RC Universal standard, Other strikes Available to order.
Certified ANSI/BHMA	A156.12, Grade 2 BHMA CERTIFIED
UL/cUL	Listed for 90 minute fire doors UL

DIMENSIONS	A	B	C	D	WIDTH
Based on Woodland Lever					
PASSAGE					
Lever	10 8/16" 12 1/8"	2 5/8"	2 1/2"	4" 5 1/2"	2 13/16"
ENTRY					
Lever	10 8/16" 12 1/8"	2 5/8"	2 1/2"	4" 5 1/2"	2 13/16"

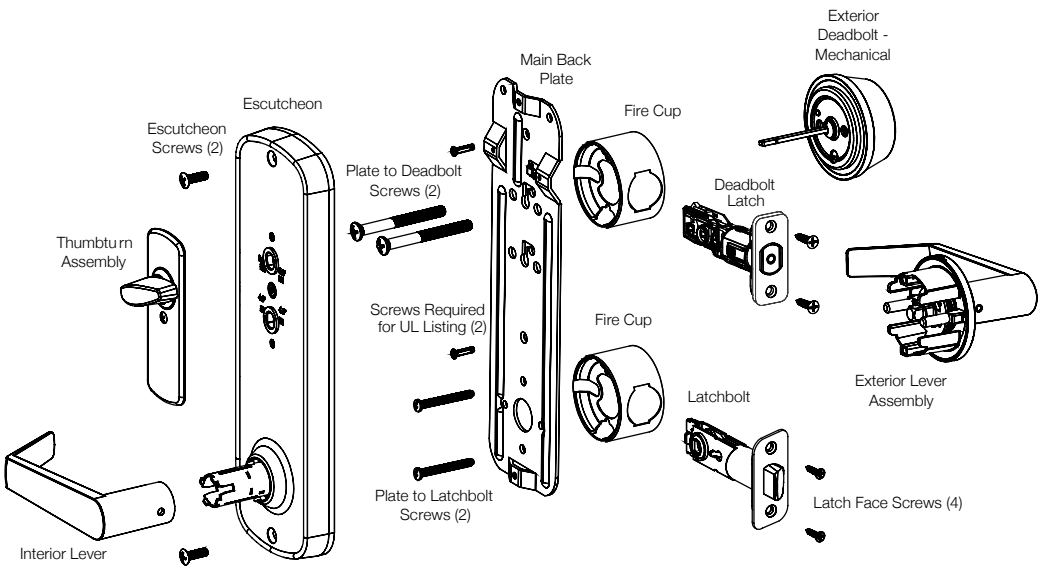

Mechanical View

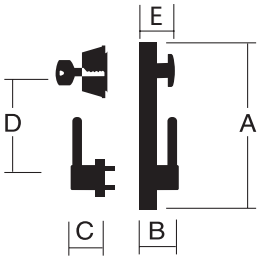

Price List

YH COLLECTION
GRADE 2

BOX PACK LIST PRICE

Interconnected Available lever styles shown below. Premier Deadbolt - Standard KW, SC, Para D200 Deadbolt - GA, SFIC, Others 90 Min UL Rating Standard	**DESIGN**	**FUNCTION NO BHMA**	**US3 605**	**US15 619**	**BSP Black Suede** **Note: QuickShip orders over 50 pieces need to be ordered factory direct**	**US26D 626**	**10BE 613E**	**10BP**
YR852 Single Locking All Levers	Interconnect	852	250.00	**250.00**	250.00	**250.00**	270.00	270.00
YR853 Privacy with Indicator All Levers	Interconnect	853	250.00	250.00	250.00	250.00	270.00	270.00

NOTE: For lever finish availability see YH pages 48-52

ACADEMY

AUGUSTA

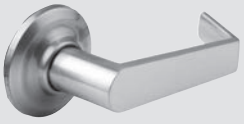

CHARLESTON

DELAWARE

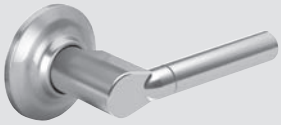

KINCAID

MARINA

McCLURE

MILAN

MONROE

NORWOOD*

PACIFIC BEACH

WOODLAND

*ships standard

VALDOSTA

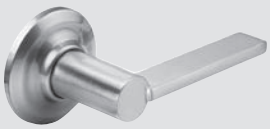

VIRGO

Price List

YH COLLECTION®

INTERCONNECTED PASSAGE LEVER PAIRS++			
Design	**Part #**	**US26D**	**US15**
Academy (Passage Lever Pair)	**YR05D67***	**36.00**	**36.00**
Augusta (Passage Lever Pair)	**YR05D66***	**36.00**	**36.00**
Delaware (Passage Lever Pair)	**YR05D6D***	**36.00**	**36.00**
Kincaid (Passage Lever Pair)	**YR05D6K***	**36.00**	**36.00**
Marina (Passage Lever Pair)	**YR05D64***	**36.00**	**36.00**
McClure (Passage Lever Pair)	**YR05D65***	**36.00**	**36.00**
Milan (Passage Lever Pair)	**YR05D63***	**36.00**	**36.00**
Monroe (Passage Lever Pair)	**YR05D6W***	**36.00**	**36.00**
Norwood (Passage Lever Pair)	**YR05D68***	**36.00**	**36.00**
Pacific Beach (Passage Lever Pair)	**YR05D62***	**36.00**	**36.00**
Valdosta (Passage Lever Pair)	**YR05D6V***	**36.00**	**36.00**
Virgo (Passage Lever Pair)	**YR05D61***	**36.00**	**36.00**
Woodland (Passage Lever Pair)	**YR05D69***	**36.00**	**36.00**

++Ships Norwood standard. Upcharge Quickship. Flashship orders. Factory standard charge.

OPTIONS		
Less Cylinder (LC)	**$0.00 No deductions**	
SFIC (LC only)	**$0.00 No deductions**	Lock SFICLC only. A600 or K600 available thru YC, should be listed as a separate line item. To order specify SFIC. 872/SFIC only available with Augusta, Monroe or Pacific Beach
LFIC (LC only)	**No deductions**	Lock LFICLC only. 1210, 5210 or K800 core available thru YC, should be listed as a separate line item. To order specify YR852 x LFIC.
Arrow Keyway	**$0.00 No adder**	To order specify "AR" keyway.
Para Keyway	**$0.00 No adder**	
GA Keyway (Only)	**$0.00 No adder**	Extend leadtime for BK, MK, GMK, etc.
Other YC keyways and Cylinder formats	**$0.00 No deductions**	1. Specify less core when ordering through Yale Residential. 2. Order cylinder through Yale Commercial.
KW1 cylinder separately 6 pin	**$10.80**	See page 85 for cylinder options and part numbers.
Schlage C separately 6-pin	**$15.30**	See page 85 for cylinder options and part numbers.
Yale Para separately 6 pin	**$15.30**	See page 85 for cylinder options and part numbers.
1803 Cylinder separately	**Includes GB - GH**	Order through Yale Commercial DB = 1803-134S and Lever = 1803-54K
D Series Deadbolt Latches		Order through Arrow
Arrow cylinders separately	**See Arrow Price Book**	DB = 692C x 6 pin and Lever = 100YC x 6 pin

Latch Price List

LOCKSET LATCHES

PLAIN SPRING LATCHES

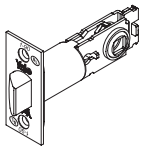

BACKSET	FRONT WIDTH	THROW	LATCH DIAMETER**	CORNER SPECS	MODEL NO	LIST PRICE
2-3/8" (60mm)	1" (25mm)	1/2" (13mm)	7/8" (22mm)	Radius	YR01802*U	$12.70
2-3/8" (60mm)	1" (25mm)	1/2" (13mm)	7/8" (22mm)	Square	YR01804*U	$12.70
2-3/4" (70mm)	1" (25mm)	1/2" (13mm)	7/8" (22mm)	Radius	YR01806*U	$12.70
2-3/4" (70mm)	1" (25mm)	1/2" (13mm)	7/8" (22mm)	Square	YR01808*U	$12.70

DEADLOCKING LATCHES

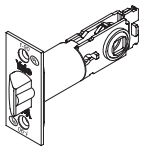

BACKSET	FRONT WIDTH	THROW	LATCH DIAMETER**	CORNER SPECS	MODEL NO	LIST PRICE
2-3/8" (60mm)	1" (25mm)	1/2" (13mm)	7/8" (22mm)	Radius	YR01812*U	$12.70
2-3/8" (60mm)	1" (25mm)	1/2" (13mm)	7/8" (22mm)	Square	YR01814*U	$12.70
2-3/4" (70mm)	1" (25mm)	1/2" (13mm)	7/8" (22mm)	Radius	YR01816*U	$12.70
2-3/4" (70mm)	1" (25mm)	1/2" (13mm)	7/8" (22mm)	Square	YR01818*U	$12.70

***Specify finish when ordering.**

MECHANICAL DEADBOLT LATCHES

For use with Yale PARA, Kwikset and Schlage C keyway cylinders

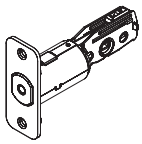

BACKSET	FRONT WIDTH	THROW	CORNER SPECS	MODEL NO	LIST PRICE
Adjustable^	1" (25mm)	1" (25mm)	Square	YR01D44*U	$14.60
Adjustable^	1" (25mm)	1" (25mm)	Radius	YR01D41*U	$14.60

For use with SFIC, Arrow and Yale Commercial GA Keyway cylinders.

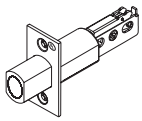

BACKSET	FRONT WIDTH	THROW	CORNER SPECS	MODEL NO	LIST PRICE
2-3/8" Fixed	1" (25mm)	1" (25mm)	Square	D38*	**
2-3/8" Fixed	1" (25mm)	1" (25mm)	Radius	D38R*	**
2-3/4" Fixed	1" (25mm)	1" (25mm)	Square	D34*	**
2-3/4" Fixed	1" (25mm)	1" (25mm)	Radius	D34R*	**

ELECTRONIC DEADBOLT LATCHES

BACKSET	FRONT WIDTH	THROW	CORNER SPECS	MODEL NO	LIST PRICE
Adjustable^	1" (25mm)	1" (25mm)	Radius	AYRDB*U	

***Specify finish when ordering.**

FIXED CORE CYLINDERS

LOCK TYPE	KEYWAY	DESCRIPTION	MODEL NUMBER		NUMBER OF PINS	LIST PRICE
			LOCKSET	DEADBOLT		
Mechanical	Kwikset®	Standard cylinder. Available 1-bitted, KA, KD (std), MK, BK	YR06D013 (605) YR06D016 (626)	YR06D103ICN (605) YR06D106ICN (626)	6	10.20
	Yale® PARA	Optional cylinder. Available 0-bitted, KD, KA, MK, BK	YR06Y303 (605) YR06Y306 (626	YR06Y413ICN (605) YR06Y416ICN (626)	6	14.60
	Yale® GA	Optional cylinder. Available 0-bitted, KD, KA, MK, CMK extend leadtime for BK, MK, GMK, etc.	1803-54K	1803-134S	6	**
	Arrow AR	Optional cylinder. Available KA, KD	100YC	692C	6	**
	Schlage® C	Optional cylinder. Available 0-bitted, KD, KA, MK, BK	YR068D01 (605) YR068D05 (626)	YR068D02ICN (605) YR068D06ICN (626)	6	14.60
Electronic	Kwikset®	Standard cylinder. Available KA, KD (std), MK	N/A	AYRD200-KW	5	14.10
	Yale® PARA	Optional cylinder. Available 0-bitted, KD, KA, MK, BK	N/A	AYRD200-PA	6	**
	Schlage® C	Optional cylinder. Available 0-Bitted, KA, KD, MK	N/A	AYRD200-SC	5	14.10

605 finish cylinders used with 605, 613E and 10BP finish locks. 626 finish cylinders used with 619, 626, BSP finish locks. Specify finish and keying when ordering.
Specify finish and keying when ordering.
****Note: Other Yale Commercial keyways and cylinder mechanisms available separately. Contact customer service for availability. Specify finish and keying when ordering.**

INTERCHANGEABLE CORE
Small Format – Small format interchangeable core is available. To order, specify "x SFIC-LC" for cylinder. i.e. AU x YR852 x SFIC-LC x 4" x 626. For entry functions, SFIC is available with for AU, MO and PB designs only. All units will be provided less core. Model number A600 or K600 cores can be ordered separately through Yale Commercial.
Large Format – Yale Commercial large format interchangeable core is available for passage function. To order, specify "x LFIC-LC" for cylinder. i.e. AU x YR852 x LFIC-LC x 4" x 626.
All units will be provided less 6-pin core only. LFIC cores can be ordered separately through Yale Commercial.

Pivot Collection®

pivot
COLLECTION®

Navis™

Exterior

Interior

The Pivot Collection® redefines the landscape of residential mechanical hardware with push to open products designed to fit seamlessly into your home. The Navis Paddle makes door opening versatile and convenient for any member of the household. A door can be easily pushed open with a hip or elbow when carrying an armful of groceries or a load of laundry — its two-way push/pull operation makes it ideal for laundry rooms, garage entries, basements, bedrooms and more. The ADA-compliant handle is also accessible for children, the elderly and the disabled.

- Hands full? No problem. Just push or pull! The Navis Paddle for Yale's Pivot Collection redefines the way we open and close doors today. Instead of rotating, just push or pull - with the palm of your hand, elbow or hip for faster, easier access.
- Ideal for a front door entry when paired with a Yale Keypad Lock.
- Two-way push/pull operation makes Navis ideal for laundry rooms, garage entries, basements, bedrooms and more.
- Fits standard doors. Works with both inswing and outswing doors, and can be handed for left or right swing.

Pivot Collection®

STYLES

STYLE	NO.	DESCRIPTION
	11	PASSAGE: Latchbolt is operated by either lever at all times. (nonhanded)
	21	PRIVACY: Latchbolt is operated by either paddle except when inside is locked by push button. Push button is released by pushing paddle on inside or with tool on outside.
	81	DUMMY: For doors where only pull is required.

PRODUCT SPECIFICATIONS

Face Bore	$2^{1}/_{8}$" Face Bore
Edge Bore	1"
Latch	Available in $2^{3}/_{8}$" or $2^{3}/_{4}$"
Door Thickness	$1^{3}/_{8}$" to $1^{3}/_{4}$"
Strike	$2^{1}/_{4}$" Full Lip RC (Round Corner)

Standard Case Quantities - Enter the exact number of individual units required. As an example: If there are 12 units in a case and you require 1 case, enter 12 in the "quantity" space. See below for an example of standard case quantities.

STANDARD CASE QUANTITIES (PIVOT COLLECTION®)

	Box Pack(SP)
Levers	12

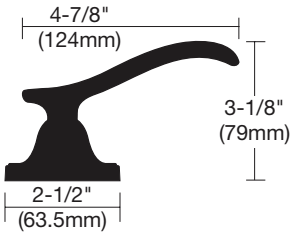

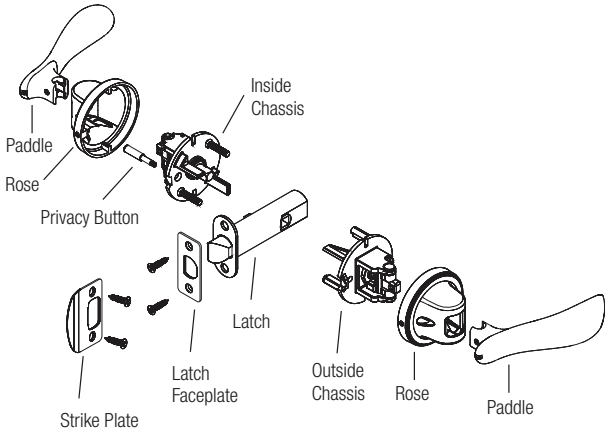

DESIGN	FUNCTION BHMA	NO	US3 605	US26 625	US26D 626	US10BE 613E	US10BP	US5 609	US15 619	US15A 620	GM Gun Metal	BSP Black Suede
Navis (NV)	**Dummy**	**81**	**48.00**	N/A	48.00	N/A	**48.00**	N/A	**48.00**	N/A	N/A	**48.00**
	Passage	**11**	**88.00**	N/A	88.00	N/A	**88.00**	N/A	**88.00**	N/A	N/A	**88.00**
	Privacy	**21**	**93.00**	N/A	93.00	N/A	**93.00**	N/A	**93.00**	N/A	N/A	**93.00**

PIVOT COMPONENTS

Latch Face Plate RC	03	YR01P213	3.00
Latch Face Plate RC	15	YR01P21N	3.00
Latch Face Plate RC	10BP/BSP	YR01P21B	3.00
Latch Passage 2-3/8		YR01P106	14.00
Latch Passage 2-3/4		YR01P336	14.00
Latch Privacy 2-3/8		YR01P306	14.00
Latch Privacy 2-3/4		YR01P316	14.00

Privacy Pin	BSP	YR08P00S	3.00
Privacy Pin	15	YR08P00N	3.00
Privacy Pin	03	YR08P003	3.00
Privacy Pin	10BP	YR08P00K	3.00
Screw Pack	10BP/BSP	YR07P0B	4.00
Screw Pack	15	YR07P0N	4.00
Screw Pack	03	YR07P03	4.00

YH Collection® Knobs

Bridgeport

Dartmouth

Cambridge

Oxford

The YH Collection continues a legacy of distinctive design, high manufacturing standards and demanding performance started by Linus Yale in the mid -19th century. The YH Collection leverages years of engineering refinement with artful execution to offer a series of ANSI Grade 2 superior light commercial quality locks that will beautifully serve any home for generations. They offer superior functionality such as push-button locking and removable knobs for simple re-keying.

YH Collection® Knobs

YH COLLECTION®

FUNCTIONS

FUNCTION	NO.	DESCRIPTION
	80	DUMMY: For doors where only pull is required.
	10	PASSAGE: Latchbolt is operated by either knob at all times.
	60	ONE SIDED W/PLATE: Latchbolt is operated by knob on one side only.
	20	PRIVACY: Latchbolt is operated by either knob except when inside knob is locked by push button. Push button is released by special emergency key on outside or by turning inside knob.
	26	BATHROOM: Same function as 20 privacy with US26 finish on interior knob.
	70	ENTRY: Guarded latchbolt operated from outside by key; inside by knob. Push button locks outside knob. Outside knob unlocks by key or by turning inside knob.
	75	CLASSROOM: Guarded latchbolt operated by either knob except when outside knob is locked by out side key. Inside knob is always free.
	78	STOREROOM: Guarded latchbolt operated from outside knob by key; inside by knob. Outside knob fixed until cylinder is unlocked by key. Key captured until cylinder is locked. Inside knob is always free.

PRODUCT SPECIFICATIONS

Door Specs	2⅛" Face Bore, 1" Edge Bore, 2⅜" or 2¾" Backset Box Pack: Latch Face 1" x 2¼" RC (Round corner; Square corner optional)
Latch	Box Pack: Adjustable 2⅜" to 2¾" RC (Round Corner)
Door Thickness	1⅜" to 1¾"
Cylinder	6 Pin KW-1 Standard (SC-1 Optional)
Keying	Box Pack: KA3 (Keyed Alike)
Faceplate	1" W x 2¼" H RC (Round Corner)
Strike	Box Pack: 2¼" Full Lip RC (Round Corner)
Certified ANSI/BHMA	A156.2 Series 4000 BHMA CERTIFIED Grade 2

Standard Case Quantities - Enter the exact number of individual units required. As an example: If there are 24 units in a case and you require 1 case, enter 24 in the "quantity" space. See below for an example of standard case quantities.

STANDARD CASE QUANTITIES (YH COLLECTION)

	Box Pack(SP)	Clear View(CV)
Dummy	12	6 Pair
Knobs	24	6
Levers	12	6
Deadbolts	12	6
Combo Sets	12	6

DIMENSIONS	A	B	C
Bridgeport	2 9/16"	2 9/16"	2"
Oxford	2 9/16"	2 1/4"	2 1/8"
Cambridge	2 9/16"	2 1/4"	2 5/64"
Dartmouth	2 9/16"	2 3/8"	2 1/2"

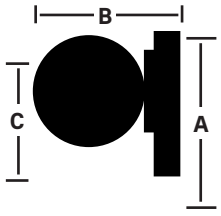

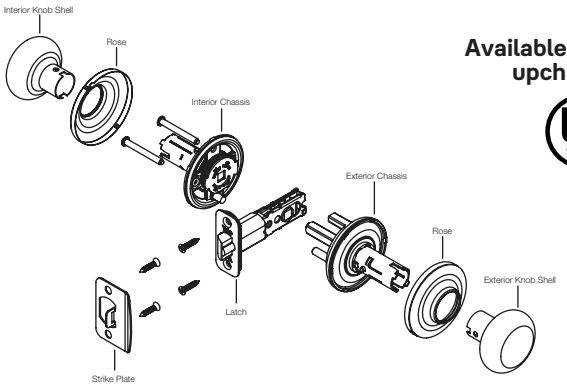

Available with upcharge.

UL®

Price List

YH Decorative Rosettes

Oval 2-9/16" W x 4-7/32" H
Center Hole: Knob 15/16" – Lever 1-1/32"

Traditional 2-9/16" W x 4-7/32" H
Center Hole: Knob 15/16" – Lever 1-1/32"

Modern 2-9/16" W x 3" H
Center Hole: 1-1/32"

Flat Square 2-9/16" W x 2-9/16" H
Center Hole: 1-1/32"

Oval

Traditional

Modern

Flat Square

Pair with all 'YH' knob styles through factory direct orders and QuickShip.

Rosette Availability	US3	US10BP	US15	BSP	US26	US26D	List Upcharge Full Lockset	Dummy
Oval	•	•	•				20.00	10.00
Traditional	•	•	•				20.00	10.00
Modern		•	•	•			16.00	8.00
Flat Square		•	•	•	•	•	16.00	8.00

Note: Decorative rosettes ship separate as kit.

BOX PACK LIST PRICE
Knobs
Featuring Push Button Locking with Free Interiors

DESIGN	FUNCTION	NO	US3	US26D	US5	US15	GM	BSP	US26	US15A	10BE	10BP
	BHMA		605	626	609	619	Gun Metal	Black Suede	625	620	613E	
Bridgeport (BP)	**Dummy**	**80**	**14.50**	14.50	N/A	**14.50**	N/A	N/A	15.50	N/A	N/A	N/A
	One Sided w/plate	**60**	36.60	36.60	N/A	36.60	N/A	N/A	38.60	N/A	N/A	N/A
	Passage	**10**	**36.60**	36.60	N/A	**36.60**	N/A	N/A	38.60	N/A	N/A	N/A
	Privacy	**20**	**42.00**	42.00	N/A	**42.00**	N/A	N/A	44.00	N/A	N/A	N/A
	Bath*	**26**	45.00	45.00	N/A	45.00	N/A	N/A	47.00	N/A	N/A	N/A
	Entry	**70**	**70.20**	70.20	N/A	**70.20**	N/A	N/A	72.20	N/A	N/A	N/A
	Classroom	**75**	70.20	70.20	N/A	70.20	N/A	N/A	72.20	N/A	N/A	N/A
	Storeroom	**78**	70.20	70.20	N/A	70.20	N/A	N/A	72.20	N/A	N/A	N/A
Cambridge (CB)	**Dummy**	**80**	**14.50**	**14.50**	**14.50**	**14.50**	**14.50**	**14.50**	**15.50**	**15.50**	15.50	**15.50**
	One Sided w/plate	**60**	36.60	36.60	36.60	36.60	36.60	36.60	38.60	38.60	38.60	38.60
	Passage	**10**	**36.60**	**36.60**	**36.60**	**36.60**	**36.60**	**36.60**	**38.60**	**38.60**	38.60	**38.60**
	Privacy	**20**	**42.00**	**42.00**	**42.00**	**42.00**	**42.00**	**42.00**	**44.00**	**44.00**	44.00	**44.00**
	Bath*	**26**	45.00	45.00	45.00	45.00	45.00	45.00	N/A	47.00	47.00	47.00
	Entry	**70**	**70.20**	**70.20**	**70.20**	**70.20**	**70.20**	**70.20**	**72.20**	**72.20**	72.20	**72.20**
	Classroom	**75**	70.20	70.20	70.20	70.20	70.20	70.20	72.20	72.20	72.20	72.20
	Storeroom	**78**	70.20	70.20	70.20	70.20	70.20	70.20	72.20	72.20	72.20	72.20
Dartmouth (DM)	**Dummy**	**80**	**25.00**	N/A	N/A	**25.00**	25.00	**25.00**	N/A	N/A	26.00	**26.00**
	One Sided w/plate	**60**	57.10	N/A	N/A	57.10	57.10	57.10	N/A	N/A	59.10	59.10
	Passage	**10**	**57.10**	N/A	N/A	**57.10**	57.10	**57.10**	N/A	N/A	59.10	**59.10**
	Privacy	**20**	**61.60**	N/A	N/A	**61.60**	61.60	**61.60**	N/A	N/A	63.60	**63.60**
	Entry	**70**	**82.80**	N/A	N/A	**82.80**	82.80	**82.80**	N/A	N/A	84.80	**84.80**
	Classroom	**75**	82.80	N/A	N/A	82.80	82.80	82.80	N/A	N/A	84.80	84.80
	Storeroom	**78**	82.80	N/A	N/A	82.80	82.80	82.80	N/A	N/A	84.80	84.80
Oxford (XF)	**Dummy**	**80**	14.50	N/A	14.50	**14.50**	N/A	N/A	N/A	N/A	N/A	**15.50**
	One Sided w/plate	**60**	36.60	N/A	36.60	36.60	N/A	N/A	N/A	N/A	N/A	38.60
	Passage	**10**	36.60	N/A	36.60	**36.60**	N/A	N/A	N/A	N/A	N/A	**38.60**
	Privacy	**20**	42.00	N/A	42.00	**42.00**	N/A	N/A	N/A	N/A	N/A	**44.00**
	Entry	**70**	70.20	N/A	70.20	**70.20**	N/A	N/A	N/A	N/A	N/A	**72.20**
	Classroom	**75**	70.20	N/A	70.20	70.20	N/A	N/A	N/A	N/A	N/A	72.20
	Storeroom	**78**	70.20	N/A	70.20	70.20	N/A	N/A	N/A	N/A	N/A	72.20

AVAILABLE OPTIONS – BOX PACK ONLY		LIST PRICE UPCHARGE
Rosettes - Traditional, Oval	Full Lockset	20.00
Rosettes - Traditional, Oval	Dummy	10.00
Rosettes - Flat Square & Modern	Full Lockset	16.00
Rosettes - Flat Square & Modern	Dummy	8.00
Accessory Stemmed Dummy Plate (allows 2 dummies to be installed on a through bored door)	073003	4.50
Clearview Packaging (Knobs are KA3)		3.00
UL 90 Minute listing		6.00
UL 90 Minute listing	Combo Sets	12.00

AVAILABLE OPTIONS – BOX PACK ONLY		LIST PRICE UPCHARGE
Page 56	YH Collection Series Latches	NC when specified
Page 83	T-Strikes	1.40
Page 83	A.S.A. 4 7/8" Strike	6.80
Page 83	Other Lockset Strikes	NC when specified
Page 84	Additional keying options	
Extension Kit 2 to 2 1/4" YH Knobs/Levers (Passage) # YR076100		5.00 (specify finish)

YH Collection® Levers

Academy

Augusta

Charleston

Delaware

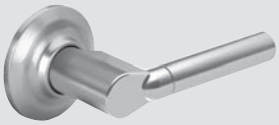

Kincaid

Standard rose as pictured.

Kincaid Black Insert

Standard rose as pictured.

Marina

McClure

Milan

Monroe

Norwood

Pacific Beach

Valdosta

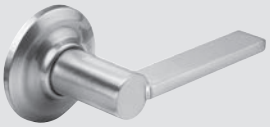

Valdosta
(Square Rose)

Virgo

YH Collection levers offer a range of designs with sculptured roses and delicately crafted curves. The "non-handed" design and strength of the interior sub-assemblies allow for quick and easy installation and years of secure operation. All YH Collection products are ANSI Grade 2 superior light commercial quality.

YH Collection® Levers

FUNCTIONS

FUNCTION	NO.	DESCRIPTION
	81	DUMMY: For doors where only pull is required. (handing required)
	11	PASSAGE: Latchbolt is operated by either lever at all times. (non-handed)
	61	ONE SIDED W/PLATE: Latchbolt is operated by lever on one side only. (handing required)
	21	PRIVACY: Latchbolt is operated by either lever except when inside lever is locked by push button. Push button is released by coin release slot on outside or by turning inside lever. (non-handed)
	22	BATHROOM: Same function as 21 privacy with US26 finish on interior lever. (handing required)
	71	ENTRY (LEVER/LEVER): Guarded latchbolt operated from outside by key; inside by lever. Push button locks outside lever. Outside lever unlocks by key or by turning inside lever. (nonhanded)
	73	ENTRY (LEVER/LEVER): Guarded latchbolt operated from outside lever by key. Inside by lever. Turn button locks outside lever. Outside lever unlocks by key or turning inside turn button. (non-handed)
	74LC	ENTRY (Lever/Lever): Guarded latchbolt with SFIC cylinder operated from outside lever by key. Inside by lever. Turn button locks outside lever. Outside lever unlocks by key or turning inside turn button. (non-handed)
	76	CLASSROOM: Guarded latchbolt operated by either lever except when outside lever is locked by outside key. Inside lever is always free. (handing required)
	79	STOREROOM: ADA Guarded latchbolt operated from outside lever by key; inside by lever. Outside lever fixed until cylinder is unlocked by key. Key captured until cylinder is locked. Inside lever is always free. (handing required)

Standard Case Quantities - Enter the exact number of individual units required. As an example: If there are 24 units in a case and you require 1 case, enter 24 in the "quantity" space. See below for an example of standard case quantities.

STANDARD CASE QUANTITIES (YH COLLECTION)	BOX PACK(SP)	CLEAR VIEW(CV)
Dummy	12	6 Pair
Knobs	24	6
Levers	12	6
Deadbolts	12	6
Combo Sets	12	6

PRODUCT SPECIFICATIONS

Door Specs	2⅛" Face Bore, 1" Edge Bore, 2⅜" or 2¾" Backset Box Pack: Latch Face 1" x 2¼" RC (Round corner; Square corner optional)
Latch	Box Pack: Adjustable 2⅜" or 2¾" RC (Round Corner)
Door Thickness	1⅜" to 1¾"
Cylinder	6 Pin KW-1 Standard (SC-1 Optional)
Keying	Box Pack: KA3 (Keyed Alike)
Faceplate	1" W x 2¼" H RC (Round Corner)
Strike	Box Pack: 2¼" Full Lip RC (Round Corner)
Certified ANSI/BHMA	A156.2 Series 4000 Grade 2 BHMA CERTIFIED

DIMENSIONS	A	B	C
Academy	2 9/16"	2 7/16"	4 19/64"
Augusta	2 9/16"	2 ½"	4 ¾"
Charleston	2 9/16"	2 ½"	5 ⅜"
Delaware	2 9/16"	2 ¾"	4 ⅝"
Kincaid	2 9/16"	2 7/16"	4 ½"
Kincaid Black Insert	2 9/16"	2 7/16"	4 ½"
Marina	2 9/16"	3 5/16"	4 ⅞"
McClure	2 9/16"	2 7/16"	4 3/16"
Milan	2 9/16"	2 7/16"	4 1/16"
Monroe	2 9/16"	2 7/16"	4 ⅝"
Norwood	2 9/16"	2 ½"	4 7/32"
Pacific Beach	2 9/16"	2 7/16"	4 ¾"
Valdosta	2 9/16"	2 ½"	4 ⅝"
Virgo	2 9/16"	2 9/16"	4 ½"

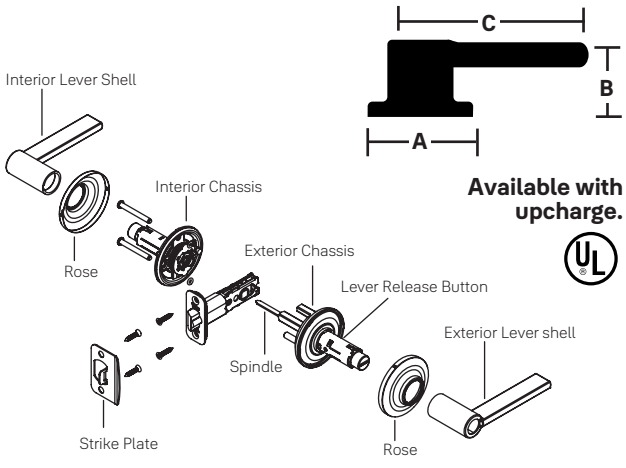

Available with upcharge.

YH Collection® Levers

YH COLLECTION®

Decorative Rosettes

Oval 2-9/16" W x 4-7/32" H
Center Hole: Knob 15/16" – Lever 1-1/32"

Traditional 2-9/16" W x 4-7/32" H
Center Hole: Knob 15/16" – Lever 1-1/32"

Modern 2-9/16" W x 3" H
Center Hole: 1-1/32"

Flat Round 2-9/16" Dia
Center Hole: 1-1/32"

Flat Square 2-9/16" W x 2-9/16" H
Center Hole: 1-1/32"

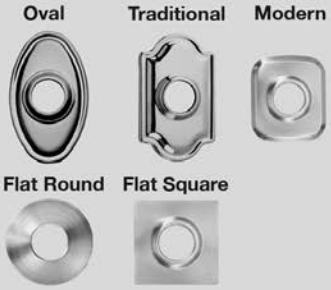

Pair with all 'YH' knob styles through factory direct orders and QuickShip.

Rosette Availability	US3	US10BP	US15	BSP	US26	US26D	List Upcharge Full Lockset	Dummy
Oval	•	•	•				20.00	10.00
Traditional	•	•	•				20.00	10.00
Modern		•	•	•			16.00	8.00
Flat Round		•	•		•	•	10.00	5.00
Flat Square		•	•	•	•	•	16.00	8.00

Note: Decorative rosettes ship separate as kit.

BOX PACK LIST PRICE
Featuring Push Button Locking with Free Interiors

DESIGN	FUNCTION BHMA	NO	US3 605	US26 625	US26D 626	US5 609	US15 619	US15A 620	GM Gun Metal	BSP Black Suede	10BE 613E	US10BP
Academy (AC)	**Dummy**	**81**	N/A	N/A	**27.00**	**27.00**	**27.00**	N/A	N/A	N/A	N/A	N/A
	Passage	**11**	N/A	N/A	**63.50**	**63.50**	**63.50**	N/A	N/A	N/A	N/A	N/A
	One Sided w/plate	**61**	N/A	N/A	63.50	63.50	63.50	N/A	N/A	N/A	N/A	N/A
	Privacy**	**21**	N/A	N/A	**67.70**	**67.70**	**67.70**	N/A	N/A	N/A	N/A	N/A
	Entry (Lever/Lever)**	**71**	N/A	N/A	**105.00**	**105.00**	**105.00**	N/A	N/A	N/A	N/A	N/A
	Entry (T - Turn)	**73**	N/A	N/A	105.00	105.00	105.00	N/A	N/A	N/A	N/A	N/A
	Classroom	**76**	N/A	N/A	105.00	105.00	105.00	N/A	N/A	N/A	N/A	N/A
	Storeroom	**79**	N/A	N/A	**105.00*****	**105.00*****	**105.00*****	N/A	N/A	N/A	N/A	N/A
Augusta (AU)	**Dummy**	**81**	**28.00**	N/A	**28.00**	28.00	**28.00**	N/A	N/A	N/A	29.00	**29.00**
	Passage	**11**	**67.00**	N/A	**67.00**	67.00	**67.00**	N/A	N/A	N/A	69.00	**69.00**
	One Sided w/plate	**61**	67.00	N/A	67.00	67.00	67.00	N/A	N/A	N/A	69.00	69.00
	Privacy**	**21**	**75.00**	N/A	**75.00**	75.00	**75.00**	N/A	N/A	N/A	77.00	**77.00**
	Entry (Lever/Lever)**	**71**	**113.00**	N/A	**113.00**	113.00	**113.00**	N/A	N/A	N/A	115.00	**115.00**
	Entry (T - Turn)	**73**	**113.00**	N/A	**113.00**	113.00	**113.00**	N/A	N/A	N/A	115.00	115.00
	Entry SFIC	**74LC**	113.00	N/A	113.00	113.00	113.00	N/A	N/A	N/A	115.00	115.00
	Classroom	**76**	113.00	N/A	113.00	113.00	113.00	N/A	N/A	N/A	115.00	115.00
	Storeroom	**79**	**113.00**	N/A	**113.00**	113.00	**113.00**	N/A	N/A	N/A	115.00	115.00
Charleston (CH)	**Dummy**	**81**	N/A	N/A	**28.00**	N/A	**28.00**	N/A	N/A	**28.00**	29.00	N/A
	Passage	**11**	N/A	N/A	**67.00**	N/A	**67.00**	N/A	N/A	**67.00**	69.00	N/A
	One Sided w/plate	**61**	N/A	N/A	67.00	N/A	67.00	N/A	N/A	67.00	69.00	N/A
	Privacy**	**21**	N/A	N/A	**75.00**	N/A	**75.00**	N/A	N/A	**75.00**	77.00	N/A
	Entry (Lever/Lever)**	**71**	N/A	N/A	**113.00**	N/A	**113.00**	N/A	N/A	**113.00**	115.00	N/A
	Entry (T - Turn)	**73**	N/A	N/A	113.00	N/A	113.00	N/A	N/A	113.00	115.00	N/A
	Classroom	**76**	N/A	N/A	113.00	N/A	113.00	N/A	N/A	113.00	115.00	N/A
	Storeroom	**79**	N/A	N/A	113.00	N/A	113.00	N/A	N/A	113.00	115.00	N/A
Delaware (DW)	**Dummy**	**81**	N/A	28.00	28.00	N/A	**28.00**	N/A	N/A	**28.00**	29.00	30.00
	Passage	**11**	N/A	67.00	67.00	N/A	**67.00**	N/A	N/A	**67.00**	69.00	69.00
	One Sided w/plate	**61**	N/A	67.00	67.00	N/A	67.00	N/A	N/A	67.00	69.00	69.00
	Privacy**	**21**	N/A	75.00	75.00	N/A	**75.00**	N/A	N/A	**75.00**	77.00	77.00
	Bath*	**22**	N/A	78.00	78.00	N/A	78.00	N/A	N/A	78.00	80.00	80.00
	Entry (Lever/Lever)**	**71**	N/A	113.00	113.00	N/A	**113.00**	N/A	N/A	**113.00**	115.00	115.00
	Entry (T - Turn)	**73**	N/A	113.00	113.00	N/A	113.00	N/A	N/A	113.00	115.00	115.00
	Classroom	**76**	N/A	113.00	113.00	N/A	113.00	N/A	N/A	113.00	115.00	115.00
	Storeroom	**79**	N/A	113.00	113.00	N/A	113.00	N/A	N/A	113.00	115.00	115.00
Kincaid (KC)	**Dummy**	**81**	**32.70**	N/A	32.70	N/A	**32.70**	N/A	N/A	**32.70**	N/A	**33.70**
	Passage	**11**	**75.00**	N/A	75.00	N/A	**75.00**	N/A	N/A	**75.00**	N/A	**77.00**
	One Sided w/plate	**61**	75.00	N/A	75.00	N/A	75.00	N/A	N/A	75.00	N/A	77.00
	Privacy**	**21**	**79.00**	N/A	79.00	N/A	**79.00**	N/A	N/A	**79.00**	N/A	**81.00**
	Entry (Lever/Lever)**	**71**	**118.00**	N/A	118.00	N/A	**118.00**	N/A	N/A	**118.00**	N/A	**120.00**
	Entry (T - Turn)	**73**	118.00	N/A	118.00	N/A	118.00	N/A	N/A	118.00	N/A	120.00
	Classroom	**76**	118.00	N/A	118.00	N/A	118.00	N/A	N/A	118.00	N/A	120.00
	Storeroom	**79**	118.00	N/A	118.00	N/A	118.00	N/A	N/A	118.00	N/A	120.00

*** Bath Function has US26 Polished Chrome Interior**
**** ADA Push Button Locking**
***** UL: add 6.00 (in QuickShip only)**

YH Collection® Levers

BOX PACK LIST PRICE
Featuring Push Button Locking with Free Interiors

DESIGN	FUNCTION BHMA	NO	US3 605	US26 625	US26D 626	US5 609	US15 619	US15A 620	GM Gun Metal	BSP Black Suede	10BE 613E	US10BP
Kincaid Black Insert (KCB)	**Dummy**	**81**	**37.00**	N/A	N/A	N/A	**37.00**	N/A	N/A	N/A	N/A	**38.00**
	Passage	**11**	**95.60**	N/A	N/A	N/A	**95.60**	N/A	N/A	N/A	N/A	**97.60**
	Privacy**	**21**	**102.00**	N/A	N/A	N/A	**102.00**	N/A	N/A	N/A	N/A	**104.00**
	Entry (Lever/Lever)**	**71**	**128.00**	N/A	N/A	N/A	**128.00**	N/A	N/A	N/A	N/A	**130.00**
	Classroom	**76**	128.00	N/A	N/A	N/A	128.00	N/A	N/A	N/A	N/A	130.00
	Storeroom	**79**	128.00	N/A	N/A	N/A	128.00	N/A	N/A	N/A	N/A	130.00
Marina (MA)	**Dummy**	**81**	N/A	**28.00**	28.00	N/A	**28.00**	N/A	28.00	N/A	29.00	**29.00**
	Passage	**11**	N/A	**67.00**	67.00	N/A	**67.00**	N/A	67.00	N/A	69.00	**69.00**
	One Sided w/plate	**61**	N/A	67.00	67.00	N/A	67.00	N/A	67.00	N/A	69.00	69.00
	Privacy*	**21**	N/A	**75.00**	75.00	N/A	**75.00**	N/A	75.00	N/A	77.00	**77.00**
	Bath*	**22**	N/A	78.00	78.00	N/A	78.00	N/A	78.00	N/A	80.00	80.00
	Entry (Lever/Lever)**	**71**	N/A	**113.00**	113.00	N/A	**113.00**	N/A	113.00	N/A	115.00	**115.00**
	Entry (T - Turn)	**73**	N/A	113.00	113.00	N/A	113.00	N/A	113.00	N/A	115.00	115.00
	Classroom	**76**	N/A	113.00	113.00	N/A	113.00	N/A	113.00	N/A	115.00	115.00
	Storeroom	**79**	N/A	113.00	113.00	N/A	113.00	N/A	113.00	N/A	115.00	115.00
McClure (MC)	**Dummy**	**81**	**27.00**	N/A	27.00	N/A	**27.00**	27.00	N/A	N/A	28.00	**28.00**
	Passage	**11**	**63.50**	N/A	63.50	N/A	**63.50**	63.50	N/A	N/A	65.50	**65.50**
	One Sided w/plate	**61**	63.50	N/A	63.50	N/A	63.50	63.50	N/A	N/A	65.50	65.50
	Privacy**	**21**	**67.70**	N/A	67.70	N/A	**67.70**	67.70	N/A	N/A	69.70	**69.70**
	Entry (Lever/Lever)**	**71**	**105.00**	N/A	105.00	N/A	**105.00**	105.00	N/A	N/A	107.00	**107.00**
	Entry (T - Turn)	**73**	105.00	N/A	105.00	N/A	105.00	105.00	N/A	N/A	107.00	107.00
	Classroom	**76**	105.00	N/A	105.00	N/A	105.00	105.00	N/A	N/A	107.00	107.00
	Storeroom	**79**	105.00	N/A	105.00	N/A	105.00	105.00	N/A	N/A	107.00	107.00
Milan (MN)	**Dummy**	**81**	**27.00**	**27.00**	27.00	N/A	**27.00**	N/A	N/A	N/A	N/A	N/A
	Passage	**11**	**63.50**	**63.50**	63.50	N/A	**63.50**	N/A	N/A	N/A	N/A	N/A
	One Sided w/plate	**61**	63.50	63.50	63.50	N/A	63.50	N/A	N/A	N/A	N/A	N/A
	Privacy**	**21**	**67.70**	**67.70**	67.70	N/A	**67.70**	N/A	N/A	N/A	N/A	N/A
	Bath*	**22**	70.70	70.70	70.70	N/A	70.70	N/A	N/A	N/A	N/A	N/A
	Entry (Lever/Lever)**	**71**	**105.00**	**105.00**	105.00	N/A	**105.00**	N/A	N/A	N/A	N/A	N/A
	Entry (T - Turn)	**73**	105.00	105.00	105.00	N/A	105.00	N/A	N/A	N/A	N/A	N/A
	Classroom	**76**	105.00	105.00	105.00	N/A	105.00	N/A	N/A	N/A	N/A	N/A
	Storeroom	**79**	105.00	105.00	105.00	N/A	105.00	N/A	N/A	N/A	N/A	N/A
Monroe (MO)	**Dummy**	**81**	28.00	N/A	**28.00**	N/A	28.00	N/A	N/A	28.00	29.00	N/A
	Passage	**11**	67.00	N/A	**67.00**	N/A	67.00	N/A	N/A	67.00	69.00	N/A
	One Sided w/plate	**61**	67.00	N/A	67.00	N/A	67.00	N/A	N/A	67.00	69.00	N/A
	Privacy**	**21**	75.00	N/A	**75.00**	N/A	75.00	N/A	N/A	75.00	77.00	N/A
	Entry (Lever/Lever)**	**71**	113.00	N/A	**113.00**	N/A	113.00	N/A	N/A	113.00	115.00	N/A
	Entry (T - Turn)	**73**	113.00	N/A	113.00	N/A	113.00	N/A	N/A	113.00	115.00	N/A
	Classroom	**76**	113.00	N/A	**113.00**	N/A	113.00	N/A	N/A	113.00	115.00	N/A
	Storeroom	**79**	113.00	N/A	**113.00**	N/A	113.00	N/A	N/A	113.00	115.00	N/A
Norwood (NW)	**Dummy**	**81**	**27.00**	**27.00**	**27.00**	**27.00**	**27.00**	**27.00**	**27.00**	**27.00**	28.00	**28.00**
	Passage	**11**	**63.50**	**63.50**	**63.50**	**63.50**	**63.50**	**63.50**	**63.50**	**63.50**	65.50	**65.50**
	One Sided w/plate	**61**	63.50	63.50	63.50	63.50	63.50	63.50	63.50	63.50	65.50	65.50
	Privacy**	**21**	**67.70**	**67.70**	**67.70**	**67.70**	**67.70**	**67.70**	**67.70**	**67.70**	69.70	**69.70**
	Bath*	**22**	70.70	70.70	70.70	70.70	70.70	70.70	70.70	70.70	72.70	72.70
	Entry (Lever/Lever)**	**71**	**105.00**	**105.00**	**105.00**	**105.00**	**105.00**	**105.00**	**105.00**	**105.00**	107.00	**107.00**
	Entry (T - Turn)	**73**	105.00	105.00	105.00	105.00	105.00	105.00	105.00	105.00	107.00	107.00
	Classroom	**76**	105.00	105.00	105.00	105.00	105.00	105.00	105.00	105.00	107.00	107.00
	Storeroom	**79**	105.00	105.00	**105.00**	105.00	105.00	105.00	105.00	105.00	107.00	107.00
Pacific Beach (PB)	**Dummy**	**81**	**28.00**	28.00	**28.00**	28.00	**28.00**	N/A	N/A	N/A	29.00	N/A
	Passage	**11**	**67.00**	67.00	**67.00**	67.00	**67.00**	N/A	N/A	N/A	69.00	N/A
	One Sided w/plate	**61**	67.00	67.00	67.00	67.00	67.00	N/A	N/A	N/A	69.00	N/A
	Privacy**	**21**	**75.00**	75.00	**75.00**	75.00	**75.00**	N/A	N/A	N/A	77.00	N/A
	Bath*	**22**	78.00	78.00	78.00	78.00	78.00	N/A	N/A	N/A	80.00	N/A
	Entry (Lever/Lever)**	**71**	**113.00**	113.00	**113.00**	113.00	**113.00**	N/A	N/A	N/A	115.00	N/A
	Entry (T - Turn)	**73**	113.00	113.00	113.00	113.00	113.00	N/A	N/A	N/A	115.00	N/A
	Classroom	**76**	113.00	113.00	**113.00**	113.00	113.00	N/A	N/A	N/A	115.00	N/A
	Storeroom	**79**	113.00	113.00	**113.00**	113.00	113.00	N/A	N/A	N/A	115.00	N/A

*** Bath Function has US26 Polished Chrome Interior**
**** ADA Push Button Locking**

YH Collection® Levers

BOX PACK LIST PRICE
Featuring Push Button Locking with Free Interiors

DESIGN	FUNCTION BHMA	NO	US3 605	US26 625	US26D 626	US5 609	US15 619	US15A 620	GM Gun Metal	BSP Black Suede	10BE 613E	US10BP
Valdosta (VL)	**Dummy**	**81**	N/A	**28.00**	**28.00**	N/A	**28.00**	N/A	N/A	**28.00**	29.00	**29.00**
	Passage	**11**	N/A	**67.00**	**67.00**	N/A	**67.00**	N/A	N/A	**67.00**	69.00	**69.00**
	One Sided w/plate	**61**	N/A	67.00	67.00	N/A	67.00	N/A	N/A	67.00	69.00	69.00
	Privacy**	**21**	N/A	**75.00**	**75.00**	N/A	**75.00**	N/A	N/A	**75.00**	77.00	**77.00**
	Bath*	**22**	N/A	78.00	78.00	N/A	78.00	N/A	N/A	78.00	80.00	80.00
	Entry (Lever/Lever)**	**71**	N/A	**113.00**	**113.00**	N/A	**113.00**	N/A	N/A	**113.00**	115.00	**115.00**
	Entry (T - Turn)	**73**	N/A	113.00	113.00	N/A	113.00	N/A	N/A	113.00	115.00	115.00
	Classroom	**76**	N/A	113.00	**113.00**	N/A	113.00	N/A	N/A	113.00	115.00	115.00
	Storeroom	**79**	N/A	113.00	**113.00**	N/A	113.00	N/A	N/A	113.00	115.00	115.00
Valdosta SQR Rose (VLSQ)	**Dummy**	**81**	N/A	36.00	**36.00**	N/A	**36.00**	N/A	N/A	**36.00**	N/A	N/A
	Passage	**11**	N/A	83.00	**83.00**	N/A	**83.00**	N/A	N/A	**83.00**	N/A	N/A
	One Sided w/plate	**61**	N/A	83.00	83.00	N/A	83.00	N/A	N/A	83.00	N/A	N/A
	Privacy**	**21**	N/A	91.00	**91.00**	N/A	**91.00**	N/A	N/A	**91.00**	N/A	N/A
	Bath*	**22**	N/A	94.00	94.00	N/A	94.00	N/A	N/A	94.00	N/A	N/A
	Entry (Lever/Lever)**	**71**	N/A	129.00	**129.00**	N/A	**129.00**	N/A	N/A	**129.00**	N/A	N/A
	Entry (T - Turn)	**73**	N/A	129.00	129.00	N/A	129.00	N/A	N/A	129.00	N/A	N/A
	Classroom	**76**	N/A	129.00	129.00	N/A	129.00	N/A	N/A	129.00	N/A	N/A
	Storeroom	**79**	N/A	129.00	129.00	N/A	129.00	N/A	N/A	129.00	N/A	N/A
Virgo (VG)	**Dummy**	**81**	27.00	27.00	27.00	N/A	27.00	27.00	N/A	27.00	28.00	28.00
	Passage	**11**	63.50	63.50	63.50	N/A	63.50	63.50	N/A	63.50	65.50	65.50
	One Sided w/plate	**61**	63.50	63.50	63.50	N/A	63.50	63.50	N/A	63.50	65.50	65.50
	Privacy**	**21**	67.70	67.70	67.70	N/A	67.70	67.70	N/A	67.70	69.70	69.70
	Bath*	**22**	N/A	N/A	70.70	N/A	70.70	70.70	N/A	70.70	72.70	72.70
	Entry (Lever/Lever)**	**71**	105.00	105.00	105.00	N/A	105.00	105.00	N/A	105.00	107.00	107.00
	Entry (T - Turn)	**73**	105.00	105.00	105.00	N/A	105.00	105.00	N/A	105.00	107.00	107.00
	Classroom	**76**	105.00	105.00	105.00	N/A	105.00	105.00	N/A	105.00	107.00	107.00
	Storeroom	**79**	105.00	105.00	105.00	N/A	105.00	105.00	N/A	105.00	107.00	107.00

*** Bath Function has US26 Polished Chrome Interior**
**** ADA Push button locking**

AVAILABLE OPTIONS – BOX PACK ONLY		LIST PRICE UPCHARGE
Rosettes - Traditional, Oval	Full Lockset	20.00
Rosettes - Traditional, Oval	Dummy	10.00
Rosettes - Flat Round	Full Lockset	10.00
Rosettes - Flat Round	Dummy	5.00
Rosettes - Flat Square & Modern	Full Lockset	16.00
Rosettes - Flat Square & Modern	Dummy	8.00
Accessory Stemmed Dummy Plate	YR073003	6.00
(allows a Dummy with Stems to be created from 2 Standard Dummy Trims)		
Clearview Packaging (Levers are KA2)		3.00
UL 90 Minute listing		6.00
UL 90 Minute listing	Combo Sets	12.00

AVAILABLE OPTIONS – BOX PACK ONLY		LIST PRICE UPCHARGE
Page 56	YH Collection Series Latches	NC when specified
Page 83	T-Strikes	1.40
Page 83	A.S.A. 4⅞" Strike	6.80
Page 83	Other Lockset Strikes	NC when specified
Page 84	Additional keying options	
Page 84	Para cylinder options	**3.00**
	GA Keyway (allow for extended lead time)	Add $20.00
Extension Kit 2 to 2 1/4" YH Knobs/Levers (Passage) # YR076100		**5.00 (specify finish)**

NOTE: YH Collection levers are designed to be reversible to eliminate handing (except for the single dummy, Function #81, and entry functions (Function #72). For the single dummy (Function #81) and entry functions (Function #72), please specify handing either right hand (RH) or left hand (LH) when ordering these functions, or when ordering split finishes.

HOW TO DETERMINE HANDING OF DOORS

- The handing of a door is always determined by facing the exterior of a door.
- If the hinge is on the left side of the door, the door is left handed (LH).
- If the hinge is on the right side of the door, the door is right handed (RH).
- To order a handed product, specify LH or RH. Not all products are handed; only specify handing when required.

Storeroom, Classroom, Dummies, and Interior Packs require handing

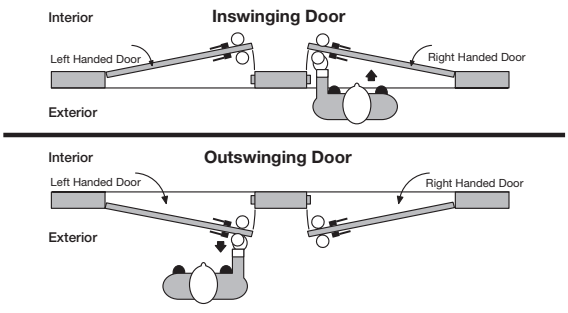

YH Collection® Deadbolts

82 Premier
Single Cylinder

83 Select
Single Cylinder

85 Select
Double Cylinder

87
One Sided with Plate

Contractors will appreciate our ongoing focus on builder functionality with these finely designed ANSI Grade 2 YH Collection deadbolts. The Premier Deadbolt "face-removable" design provides easy access to the solid brass cylinder without having to remove the deadbolt from the door. This is a significant benefit to multi-family and multi-unit projects commonly requiring re-keying. The Select Deadbolt offers ANSI Grade 2 strength and security with standard access to the cylinder.

YH Collection® Deadbolts

YH COLLECTION®

FUNCTIONS

FUNCTION	NO.	DESCRIPTION
	82 83	SINGLE CYLINDER: Latch operated from outside by key, inside by T turn.
	85	DOUBLE CYLINDER: Latch operated on either side by key. Concealed screws.

DIMENSIONS	A	B	C
82 Single Exterior	2 19/32"	1 1/8"	2"
82 Single Interior	2 1/2"	1 7/8"	2"
83 Single Exterior	2 1/2"	1"	1 7/8"
83 Single Interior	2 1/2"	1 7/8"	2"

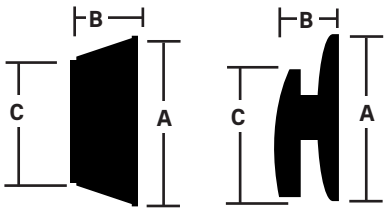

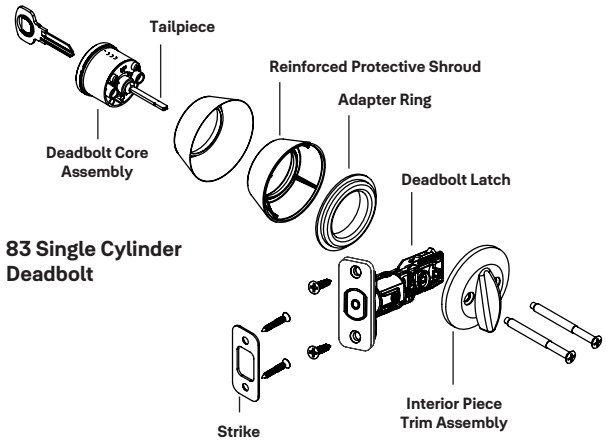

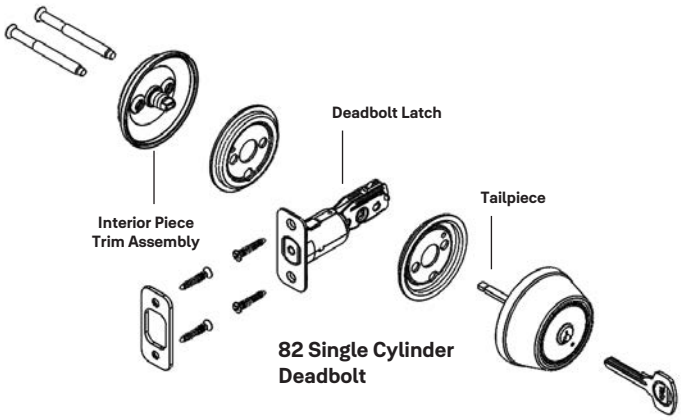

PRODUCT SPECIFICATIONS

Door Specs	2⅛" Face Bore, 1" Edge Bore, 2⅜" or 2¾" Backset Box Pack: Latch Face 1" x 2¼" RC (Round corner; Square corner optional)
Latch	Box Pack: Adjustable 2⅜" or 2¾" RC (Round Corner)
Door Thickness	1⅜" to 1¾" 2" to 2¼" Requires ext. Kit 07600* 83 Single Cylinder Select Series Only
Cylinder	6 Pin KW-1 Standard (SC-1 Optional)
Keying	Box Pack: KA3 (Keyed Alike)
Faceplate	1" W x 2¼" H RC (Round Corner)
Strike	Box Pack: 1" x 2 1/4" RC RC (Round Corner)
Certified ANSI/BHMA	A156.36 Series 4000 BHMA CERTIFIED Grade 2 **Meets ADA Guidelines**

Standard Case Quantities - Enter the exact number of individual units required. As an example: If there are 24 units in a case and you require 1 case, enter 24 in the "quantity" space. See below for an example of standard case quantities.

STANDARD CASE QUANTITIES (YH COLLECTION)

	Box Pack(SP)	Clear View(CV)
Dummy	12	6 Pair
Knobs	24	6
Levers	12	6
Deadbolts	12	6
Combo Sets	12	6

Available with upcharge.

YH Collection® Deadbolts

BOX PACK LIST PRICE

DESIGN	Deadbolts	NO	US3 605	US26 625	US26D 626	US5 609	US15 619	US15A 620	GM Gun Metal	BSP Black Suede	10BE 613E	10BP
Premier	Single Cyl	**82**	**69.80**	69.80	**69.80**	**69.80**	**69.80**	**69.80**	69.80	**69.80**	75.00	**75.00**
	Premier Series features: Removable Cylinders without removing deadbolt from door, includes high security strike.											
Select	Single Cyl	**83**	**57.80**	**57.80**	**57.80**	57.80	**57.80**	**57.80**	**57.80**	**57.80**	63.00	**63.00**
	Double Cyl	**85**	**66.80**	66.80	66.80	66.80	**66.80**	**66.80**	66.80	66.80	78.00	**78.00**
	One Sided w/plate	**87**	38.00	38.00	38.00	38.00	38.00	38.00	N/A	N/A	N/A	N/A

STRIKES - AVAILABLE OPTIONS - BOX PACK ONLY

ITEM	CORNER SPECS	MODEL NO	LIST PRICE UPCHARGE
Standard 1" - 2¼" SC Strike	Square Corner	YR02082	N/C when specified
Standard 1" - 2¼" RC Strike	Round Corner	YR02080	N/C when specified
1⅛" - 2¾" SC Universal Deadbolt Strike	Square Corner	YR02086	N/C when specified
1⅛" - 2¾" RC Universal Deadbolt Strike	Round Corner	YR02088	N/C when specified
1⅛" - 2¾" RC Universal Deadbolt Strike	Round Corner	YR02089	N/C when specified
1¼" - 3⅝" RC Maximum Security Strike	Round Corner	YR02081	Add $1.00
1¼" - 3⅝" SC Maximum Security Strike	Square Corner	YR02083	Add $1.00
1¾" - 2¼" RC Full Lip Strike^	Round Corner	YR02084	N/C when specified

* Specify finish when ordering
^ Not available for 85 deadbolt

AVAILABLE OPTIONS – BOX PACK ONLY		LIST PRICE UPCHARGE
Clearview Packaging		3.00
UL 90 Minute listing		6.00
UL 90 Minute listing	Combo Sets	12.00

AVAILABLE OPTIONS – BOX PACK ONLY		LIST PRICE UPCHARGE
Page 56	YH Collection Series Latches	NC when specified
Page 84	Additional keying options	
Page 84	Para cylinder options (Not available for 85 deadbolt)	**3.00**
Extension Kit 2 to 2-1/4" Single Deadbolt Only (Thick Door Pack) #YR07600		**12.60** (specify finish)

Latch Price List

YH COLLECTION®

		BOX PACK LIST PRICE			
INTERIOR SPRING LATCHES	**DESCRIPTION**	**DIMENSION**	**CORNER SPECS**	**MODEL NO**	**LIST PRICE**
	2 3/8" Spring Latch	1 x 2 1/4"	Square Corner	YR01D05*	10.80
	2 3/8" Spring Latch	1 x 2 1/4"	Round Corner	YR01D02*	10.80
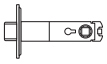	2 3/4" Spring Latch	1 x 2 1/4"	Square Corner	YR01D06*	10.80
	2 3/4" Spring Latch	1 x 2 1/4"	Round Corner	YR01D08*	10.80
	2 3/8" Spring Drive-In Latch	1" Dia.	N/A	YR01D11*	10.80
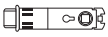	2 3/4" Spring Drive-In Latch	1" Dia.	N/A	YR01D13*	10.80
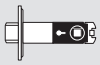	2 3/8"-2 3/4" Adj. Spring Latch	1 x 2 1/4"	Square Corner	YR01D17*	10.80
	2 3/8"-2 3/4" Adj. Spring Latch	1 x 2 1/4"	Round Corner	YR01D14*	10.80
	2 3/8"-2 3/4" Adj. Spring Dr. In Latch	1" Dia.	N/A	YR01D71*	10.80

EXTERIOR DEADLOCKING LATCHES	**DESCRIPTION**	**DIMENSION**	**CORNER SPECS**	**MODEL NO**	**LIST PRICE**
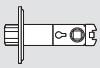	2 3/8" Deadlocking Latch	1 x 2 1/4"	Square Corner	YR01D25*	10.80
	2 3/8" Deadlocking Latch	1 x 2 1/4"	Round Corner	YR01D22*	10.80
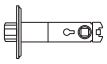	2 3/4" Deadlocking Latch	1 x 2 1/4"	Square Corner	YR01D26*	10.80
	2 3/4" Deadlocking Latch	1 x 2 1/4"	Round Corner	YR01D28*	10.80
	2 3/8" Deadlocking Dr. In Latch	1" Dia.	N/A	YR01D32*	10.80
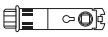	2 3/4" Deadlocking Dr. In Latch	1" Dia.	N/A	YR01D34*	10.80
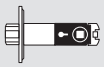	2 3/8"-2 3/4" Adj. Deadlocking Latch	1 x 2 1/4"	Square Corner	YR01D30*	10.80
	2 3/8"-2 3/4" Adj. Deadlocking Latch	1 x 2 1/4"	Round Corner	YR01D31*	10.80
	2 3/8"-2 3/4" Adj. Deadlocking Dr. In Latch	1" Dia.	N/A	YR01D33*	10.80

ADJUSTABLE DEADBOLT LATCHES	**DESCRIPTION**	**DIMENSION**	**CORNER SPECS**	**MODEL NO**	**LIST PRICE**
	2 3/8"-2 3/4" Adj. Deadbolt Latch		Square Corner	YR01D44*	10.80
	2 3/8"-2 3/4" Adj. Deadbolt Latch		Round Corner	YR01D41*	10.80
	2 3/8"-2 3/4" Adj. Deadbolt Drive-In Latch	1" Dia.	N/A	YR01D47*	10.80

***Specify finish when ordering**

New Traditions® Knobs

Doors Require Blocking

Cirrus

Horizon

Oasis

Terra

Valley

The Yale® standard duty knobs from the New Traditions series offer outstanding strength, durability and simple, elegant designs highlighted by natural curves for comfort and ease of turning. The Cirrus, Horizon, Oasis, Terra, and Valley knobs are built to the highest quality standards. All New Traditions products are built on a steel Grade 3 chassis and feature concealed holding screws. In addition, all New Traditions products feature "Quick-Install," a unique chassis design, which drastically reduces installation time. The New Traditions series offers all of these superb features at an incredible value.

New Traditions® Knobs

NEW TRADITIONS®

FUNCTIONS

FUNCTION	NO.	DESCRIPTION
	80	DUMMY: For doors where only pull is required.
	100	PASSAGE: Latchbolt is operated by either knob at all times.
	160	ONE SIDED W/PLATE: Latchbolt is operated by knob on one side only.
	200	PRIVACY: Latchbolt is operated by either knob except when inside knob is locked by turn button. A special emergency key releases turn button and unlocks outside knob.
	226	BATHROOM: Same function as 200 privacy with US26 finish on interior knob.
	700	ENTRY: Guarded Latch bolt operated from outside by key. Inside by knob. Turn button Locks both knobs. Knobs unlock by Key outside or by rotating inside turn button.

PRODUCT SPECIFICATIONS

Door Specs	2⅛" Face Bore, 1" Edge Bore, 2⅜" or 2¾" Backset Box Pack: Latch Face 1" x 21/4" Round corner (Square corner optional)
Latch	Box Pack: Adjustable 2⅜" or 2¾" RC (round corner)
Door Thickness	1⅜" to 1¾"
Cylinder	5 Pin KW-1 Cylinder Standard (SC-1 Optional)
Keying	Box Pack: KA3 (Keyed Alike) Clear Pack: KA6 (Keyed Alike in sets of 6)
Faceplate	1" W x 2¼" H RC (Round Corner)
Strike	Box Pack: 2¼" Full Lip RC (Round Corner)
Certified ANSI/BHMA	A156.2 Series 4000 BHMA CERTIFIED Grade 3

Standard Case Quantities - Enter the exact number of individual units required. As an example: If there are 24 units in a case and you require 1 case, enter 24 in the "quantity" space. See below for an example of standard case quantities.

DIMENSIONS	A	B	C
Cirrus	2 9/16"	2½"	2"
Horizon	2 9/16"	2¼"	2"
Oasis	2 9/16"	2¼"	2"
Terra	2 9/16"	2⅜"	2½"
Valley	2 9/16"	2 5/16"	1 15/16"

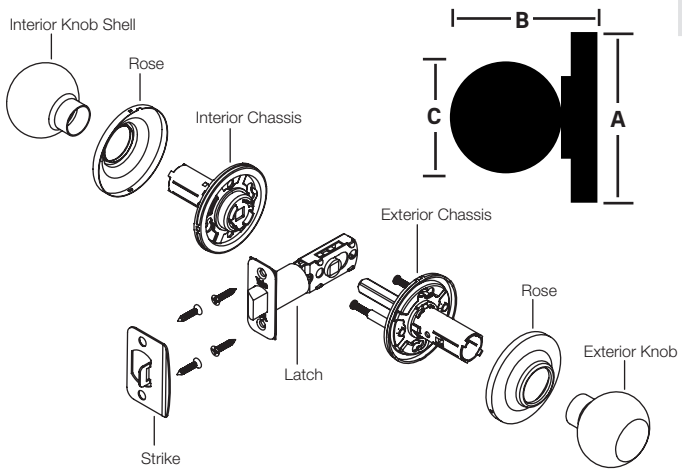

STANDARD CASE QUANTITIES (NEW TRADITIONS)

	Box Pack(SP)	Clear View(CV)
Dummy	12	6 Pair
Knobs	24	6
Levers	12	6
Deadbolts	12	6
Combo Sets	12	6

Available with upcharge.

New Traditions® Knobs

NEW TRADITIONS®

BOX PACK LIST PRICE

DESIGN	FUNCTION BHMA	NO	US3 605	US26D 626	US5 609	US15 619	GM Gun Metal	BSP Black Suede	US26 625	US15A 620	10BE 613E	10BP
Cirrus (C)	Dummy	80	**12.50**	**12.50**	N/A	**12.50**	**12.50**	N/A	13.50	13.50	13.50	**13.50**
	Passage	100	**27.80**	**27.80**	N/A	**27.80**	**27.80**	N/A	29.80	29.80	29.80	**29.80**
	One Sided w/plate	160	27.80	27.80	N/A	27.80	27.80	N/A	29.80	29.80	29.80	29.80
	Privacy	200	**30.00**	**30.00**	N/A	**30.00**	**30.00**	N/A	32.00	32.00	32.00	**32.00**
	Bath*	226	33.00	33.00	N/A	33.00	33.00	N/A	N/A	35.00	35.00	35.00
	Entry	700	**38.10**	**38.10**	N/A	**38.10**	**38.10**	N/A	40.10	40.10	40.10	**40.10**
Horizon (H)	Dummy	80	**12.50**	**12.50**	**12.50**	**12.50**	**12.50**	**12.50**	**13.50**	**13.50**	13.50	**13.50**
	Passage	100	**27.80**	**27.80**	**27.80**	**27.80**	**27.80**	**27.80**	**29.80**	**29.80**	29.80	**29.80**
	One Sided w/plate	160	27.80	27.80	27.80	27.80	27.80	27.80	29.80	29.80	29.80	29.80
	Privacy	200	**30.00**	**30.00**	**30.00**	**30.00**	**30.00**	**30.00**	**32.00**	**32.00**	32.00	**32.00**
	Bath*	226	33.00	33.00	33.00	33.00	33.00	33.00	N/A	35.00	35.00	35.00
	Entry	700	**38.10**	**38.10**	**38.10**	**38.10**	**38.10**	**38.10**	**40.10**	**40.10**	40.10	**40.10**
Oasis (O)	Dummy	80	N/A	N/A	N/A	**13.50**	N/A	N/A	N/A	N/A	N/A	**14.50**
	Passage	100	N/A	N/A	N/A	**29.40**	N/A	N/A	N/A	N/A	N/A	**31.40**
	One Sided w/plate	160	N/A	N/A	N/A	29.40	N/A	N/A	N/A	N/A	N/A	31.40
	Privacy	200	N/A	N/A	N/A	**32.70**	N/A	N/A	N/A	N/A	N/A	**34.70**
	Bath*	226	N/A	N/A	N/A	N/A	N/A	N/A	N/A	N/A	N/A	N/A
	Entry	700	N/A	N/A	N/A	**41.40**	N/A	N/A	N/A	N/A	N/A	**43.40**
Terra (T)	Dummy	80	N/A	N/A	N/A	**16.30**	**16.30**	N/A	N/A	N/A	N/A	**17.30**
	Passage	100	N/A	N/A	N/A	**38.00**	**38.00**	N/A	N/A	N/A	N/A	**40.00**
	One Sided w/plate	160	N/A	N/A	N/A	38.00	38.00	N/A	N/A	N/A	N/A	40.00
	Privacy	200	N/A	N/A	N/A	**40.00**	**40.00**	N/A	N/A	N/A	N/A	**42.00**
	Bath*	226	N/A	N/A	N/A	N/A	N/A	N/A	N/A	N/A	N/A	N/A
	Entry	700	N/A	N/A	N/A	**57.00**	**57.00**	N/A	N/A	N/A	N/A	**59.00**
Valley (V)	Dummy	80	12.50	**12.50**	N/A	N/A	N/A	N/A	N/A	N/A	N/A	N/A
	Passage	100	27.80	**27.80**	N/A	N/A	N/A	N/A	N/A	N/A	N/A	N/A
	One Sided w/plate	160	27.80	27.80	N/A	N/A	N/A	N/A	N/A	N/A	N/A	N/A
	Privacy	200	30.00	**30.00**	N/A	N/A	N/A	N/A	N/A	N/A	N/A	N/A
	Bath*	226	33.00	33.00	N/A	N/A	N/A	N/A	N/A	N/A	N/A	N/A
	Entry	700	38.10	**38.10**	N/A	N/A	N/A	N/A	N/A	N/A	N/A	N/A

*Bath Function has US26 Polished Chrome Interior

KNOB COMBO SET – BOX PACK LIST PRICE

Combo Sets Include 1 Entry Knob with 1 Single or 1 Double Deadbolt

DESIGN	FUNCTION	NO	US3	US26D	US5	US15	GM	BSP	US26	US15A	613E	10BP
	BHMA		605	626	609	619	Gun Metal	Black Suede	625	620	(10BE)	
Cirrus (C)	Single Cylinder	827	**76.20**	**76.20**	N/A	**76.20**	**76.20**	N/A	86.50	86.50	86.50	86.50
Horizon (H)	Single Cylinder	827	**76.20**	**76.20**	**76.20**	**76.20**	**76.20**	**76.20**	86.50	**86.50**	86.50	**86.50**
Oasis (O)	Single Cylinder	827	N/A	N/A	N/A	79.50	N/A	N/A	N/A	N/A	N/A	95.10
Terra (T)	Single Cylinder	827	N/A	N/A	N/A	95.10	95.10	N/A	N/A	N/A	N/A	102.10
Valley (V)	Single Cylinder	827	76.20	76.20	N/A	N/A	N/A	N/A	N/A	N/A	N/A	N/A

AVAILABLE OPTIONS – BOX PACK ONLY			LIST PRICE UPCHARGE
Clearview Packaging			3.00
UL	UL 90 Minute listing		6.00
	UL 90 Minute listing	Combo Sets	12.00

AVAILABLE OPTIONS – BOX PACK ONLY		LIST PRICE UPCHARGE
Page 66	New Traditions Series Latches	NC when specified
Page 83	T-Strikes	1.40
Page 83	A.S.A. 4⅞" Strike	6.80
Page 83	Other Lockset Strikes	NC when specified
Page 84	Additional keying options	

Note: All New Traditions entry function leversets will be shipped with the Cirrus knob exterior unless otherwise specified. New Traditions levers are designed to be reversible to eliminate handing errors (except for the single dummy, function #81, and entry function #701). For the single dummy (function #81) and entry functions (function #701), please specify handing either right hand (RH) or left hand (LH) when ordering these functions, or when ordering split finishes.

New Traditions® Levers

Doors Require Blocking

NEW TRADITIONS®

Mesa

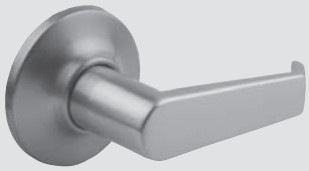

Niagara

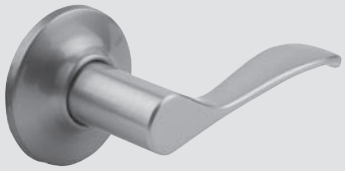

Prairie

Savannah

Vernal

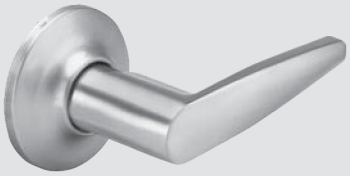

Vidalia

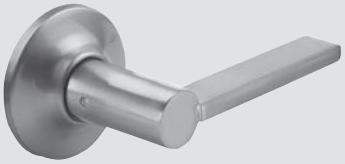

Vidalia
(Square Rose)

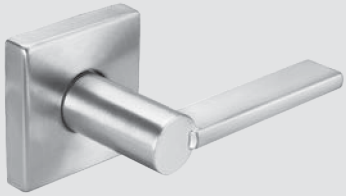

Woodland

With concealed holding screws, and a strengthened square spindle, New Traditions products reflect an outstanding commitment to quality. Like the New Traditions knobs, the levers are exquisitely designed. With free-flowing curves and smooth edges, the Mesa, Niagara, Prairie, Savannah, Vernal, Vidalia, and Woodland levers offer impeccable elegance at an exceptional price.

New Traditions® Levers

NEW TRADITIONS®

FUNCTIONS

FUNCTION	NO.	DESCRIPTION
	81	DUMMY: For doors where only pull is required. (handing required)
	101*	PASSAGE: Latchbolt is operated by either lever at all times. (non-handed)
	161	ONE SIDED W/PLATE: Latchbolt is operated by lever on one side only. (handing required)
	201	PRIVACY: Latchbolt is operated by either lever except when inside lever is locked by turn button. A coin turn releases turn button and unlocks outside lever. (non-handed)
	221	BATHROOM: Same function as 201 privacy with US26 finish on interior lever. (handing required)
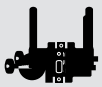	771	ENTRY (LEVER/LEVER): Guarded latch bolt operated from outside lever by key. Inside by lever. Turn button locks both levers. Levers unlock by key or by turning inside turn button.

DIMENSIONS	A	B	C
Mesa	2 9/16"	2 3/8"	3 1/4"
Niagara	2 9/16"	2 1/2"	4 7/32"
Savannah	2 9/16"	2 1/4"	3 7/8"
Prairie	2 9/16"	2 7/16"	4 19/64"
Vernal	2 9/16"	2 9/16"	4 1/2"
Vidalia	2 9/16"	2 1/2"	4 5/8"
Woodland	2 9/16"	2 5/8"	3 7/8"

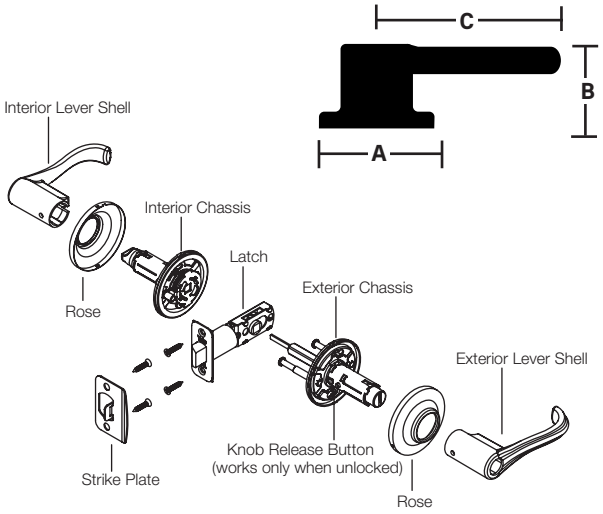

Available with upcharge.

PRODUCT SPECIFICATIONS

Door Specs	2 1/8" Face Bore, 1" Edge Bore, 2 3/8" or 2 3/4" Backset Box Pack: Latch Face 1" x 2 1/4" Round corner (Square corner optional)
Latch	Box Pack: Adjustable 2 3/8" or 2 3/4" RC (round corner)
Door Thickness	1 3/8" to 1 3/4"
Cylinder	5 Pin KW-1 Cylinder Standard (SC-1 Optional)
Keying	Box Pack: KA3 (Keyed Alike) Clear Pack: KA3 (Keyed Alike in sets of 3)
Faceplate	1" W x 2 1/4" H RC (Round Corner)
Strike	Box Pack: 2 1/4" Full Lip RC (Round Corner)
Certified ANSI/BHMA	A156.2 Series 4000 BHMA CERTIFIED Grade 3

Standard Case Quantities - Enter the exact number of individual units required. As an example: If there are 24 units in a case and you require 1 case, enter 24 in the "quantity" space. See below for an example of standard case quantities.

STANDARD CASE QUANTITIES (NEW TRADITIONS)

	Box Pack(SP)	Clear View(CV)
Dummy	12	6 Pair
Knobs	24	6
Levers	12	6
Deadbolts	12	6
Combo Sets	12	6

HOW TO DETERMINE HANDING OF DOORS

- The handing of a door is always determined by facing the exterior of a door.
- If the hinge is on the left side of the door, the door is left handed (LH).
- If the hinge is on the right side of the door, the door is right handed (RH).
- To order a handed product, specify LH or RH.
  Not all products are handed; only specify handing when required.

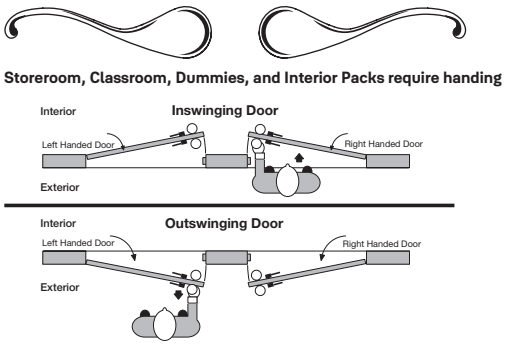

Storeroom, Classroom, Dummies, and Interior Packs require handing

New Traditions® Levers

NEW TRADITIONS® Decorative Rosettes

Flat Round 2-9/16" Dia
Center Hole: 1-1/32"

Flat Square 2-9/16" W x 2-9/16" H
Center Hole: 1-1/32"

Modern 2-9/16" W x 3" H
Center Hole: 1-1/32"

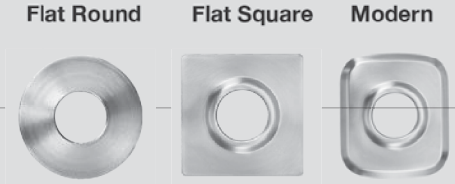

Pair with all 'NT' lever styles through factory direct orders and QuickShip.

Rosette Availability	US3	US10BP	US15	BSP	US26	US26D	List Upcharge Full Lockset	Dummy
Flat Round		•	•		•	•	10.00	5.00
Flat Square		•	•	•	•	•	16 .00	8.00
Modern		•	•	•			16.00	8.00

Note: Decorative rosettes ship separate as kit.

BOX PACK LIST PRICE

Levers DESIGN Featuring Quick Install Design	FUNCTION BHMA	NO	US3 605	US26D 626	US5 609	US15 619	GM Gun Metal	BSP Black Suede	US26 625	US15A 620	10BE 613E	10BP
Mesa (ML)	Dummy	81	N/A	**19.60**	19.60	19.60	N/A	N/A	N/A	N/A	21.10	N/A
	Passage	101	N/A	**46.40**	46.40	46.40	N/A	N/A	N/A	N/A	49.40	N/A
Not available 771 lever x lever entry	One Sided w/plate	161	N/A	46.40	46.40	46.40	N/A	N/A	N/A	N/A	49.40	N/A
	Privacy	201	N/A	**48.40**	48.40	48.40	N/A	N/A	N/A	N/A	51.40	N/A
	Entry (Knob/Lever)	701	N/A	61.90	61.90	61.90	N/A	N/A	N/A	N/A	64.90	N/A
Niagara (NL)	Dummy	81	19.60	19.60	19.60	**19.60**	19.60	**19.60**	21.10	21.10	21.10	**21.10**
	Passage	101	46.40	46.40	46.40	**46.40**	46.40	**46.40**	49.40	49.40	49.40	**49.40**
	One Sided w/plate	161	46.40	46.40	46.40	46.40	46.40	46.40	49.40	49.40	49.40	49.40
	Privacy	201	48.40	48.40	48.40	**48.40**	48.40	**48.40**	51.40	51.40	51.40	**51.40**
	Bath*	221	51.40	51.40	51.40	51.40	51.40	51.40	N/A	54.40	54.40	54.40
	Entry (Lever/Lever)	771	67.60	67.60	67.60	**67.60**	67.60	**67.60**	70.60	70.60	70.60	**70.60**
Prairie (PL)	Dummy	81	N/A	**19.60**	19.60	**19.60**	N/A	N/A	21.10	N/A	N/A	N/A
	Passage	101	N/A	**46.40**	46.40	**46.40**	N/A	N/A	49.40	N/A	N/A	N/A
	One Sided w/plate	161	N/A	46.40	46.40	46.40	N/A	N/A	49.40	N/A	N/A	N/A
	Privacy	201	N/A	**48.40**	48.40	**48.40**	N/A	N/A	51.40	N/A	N/A	N/A
	Bath*	221	N/A	51.40	51.40	51.40	N/A	N/A	N/A	N/A	N/A	N/A
	Entry (Lever/Lever)	771	N/A	**67.60**	67.60	**67.60**	N/A	N/A	70.60	N/A	N/A	N/A
Savannah (SL)	Dummy	81	**19.60**	**19.60**	19.60	**19.60**	**19.60**	19.60	**21.10**	**21.10**	21.10	**21.10**
	Passage	101	**46.40**	**46.40**	46.40	**46.40**	**46.40**	46.40	**49.40**	**49.40**	49.40	**49.40**
	One Sided w/plate	161	46.40	46.40	46.40	46.40	46.40	46.40	49.40	49.40	49.40	49.40
	Privacy	201	**48.40**	**48.40**	48.40	**48.40**	**48.40**	48.40	**51.40**	**51.40**	51.40	**51.40**
	Bath*	221	51.40	51.40	51.40	51.40	51.40	51.40	N/A	54.40	54.40	54.40
	Entry (Lever/Lever)	771	**67.60**	**67.60**	67.60	**67.60**	**67.60**	67.60	**70.60**	**70.60**	70.60	**70.60**
Vernal (VE)	Dummy	81	N/A	19.60	N/A	19.60	N/A	19.60	N/A	N/A	21.10	21.10
	Passage	101	N/A	46.40	N/A	46.40	N/A	46.40	N/A	N/A	49.40	49.40
	One Sided w/plate	161	N/A	46.40	N/A	46.40	N/A	46.40	N/A	N/A	49.40	49.40
	Privacy	201	N/A	48.40	N/A	48.40	N/A	48.40	N/A	N/A	51.40	51.40
	Entry (Lever/Lever)	771	N/A	67.60	N/A	67.60	N/A	67.60	N/A	N/A	70.60	70.60
Vidalia (VI)	Dummy	81	N/A	**19.60**	N/A	**19.60**	N/A	**19.60**	21.10	N/A	N/A	**21.10**
	Passage	101	N/A	**46.40**	N/A	**46.40**	N/A	**46.40**	49.40	N/A	N/A	**49.40**
	One Sided w/plate	161	N/A	46.40	N/A	46.40	N/A	46.40	49.40	N/A	N/A	49.40
	Privacy	201	N/A	**48.40**	N/A	**48.40**	N/A	**48.40**	51.40	N/A	N/A	**51.40**
	Bath*	221	N/A	51.40	N/A	51.40	N/A	51.40	54.40	N/A	N/A	54.40
	Entry (Lever/Lever)	771	N/A	**67.60**	N/A	**67.60**	N/A	**67.60**	70.60	N/A	N/A	**70.60**
Vidalia SQR Rose (VISQ)	Dummy	81	N/A	N/A	N/A	**27.60**	N/A	**27.60**	N/A	N/A	N/A	**29.10**
	Passage	101	N/A	N/A	N/A	**62.40**	N/A	**62.40**	N/A	N/A	N/A	**65.40**
	One Sided w/plate	161	N/A	N/A	N/A	62.40	N/A	62.40	N/A	N/A	N/A	65.40
	Privacy	201	N/A	N/A	N/A	**64.40**	N/A	**64.40**	N/A	N/A	N/A	**67.40**
	Bath*	221	N/A	N/A	N/A	67.40	N/A	67.40	N/A	N/A	N/A	70.40
	Entry (Lever/Lever)	771	N/A	N/A	N/A	**92.00**	N/A	**92.00**	N/A	N/A	N/A	**95.00**
Woodland (WL)	Dummy	81	19.60	**19.60**	**19.60**	**19.60**	**19.60**	**19.60**	**21.10**	**21.10**	21.10	**21.10**
	Passage	101	46.40	**46.40**	**46.40**	**46.40**	**46.40**	**46.40**	**49.40**	**49.40**	49.40	**49.40**
	One Sided w/plate	161	46.40	46.40	46.40	46.40	46.40	46.40	49.40	49.40	49.40	49.40
	Privacy	201	48.40	**48.40**	**48.40**	**48.40**	**48.40**	**48.40**	**51.40**	**51.40**	51.40	**51.40**
	Bath*	221	51.40	51.40	51.40	51.40	51.40	51.40	54.40	54.40	54.40	54.40
	Entry (Lever/Lever)	771	67.60	**67.60**	**67.60**	**67.60**	**67.60**	**67.60**	**70.60**	**70.60**	70.60	**70.60**

***Bath Function has US26 Polished Chrome Interior**

AVAILABLE OPTIONS – BOX PACK ONLY		LIST PRICE UPCHARGE
Clearview Packaging		3.00
UL 90 Minute listing		6.00
UL 90 Minute listing	Combo Sets	12.00

AVAILABLE OPTIONS – BOX PACK ONLY		LIST PRICE UPCHARGE
Page 66	New Traditions Series Latches	NC when specified
Page 83	T-Strikes	1.40
Page 83	A.S.A. $4^{7}/_{8}$" Strike	6.80
Page 83	Other Lockset Strikes	NC when specified
Page 84	Additional keying options	

Note: All New Traditions entry function leversets will be shipped with the Cirrus knob exterior unless otherwise specified. New Traditions levers are designed to be reversible to eliminate handing errors (except for the single dummy function #81, and entry function #701). For the single dummy (function #81) and entry functions (function #701), please specify handing either right hand (RH) or left hand (LH) when ordering these functions, or when ordering split finishes.

New Traditions® Deadbolts

810
Dummy

820
Single Cylinder

840
Double Cylinder

860
One Sided
with plate

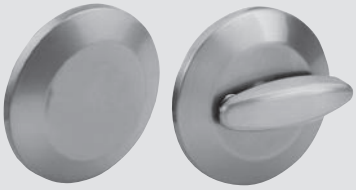

880
One Way

Below Items Not Available as UL

820R
Single Cylinder

820S
Single Cylinder

820M
Single Cylinder

The Yale 800 series deadbolts offer a variety of functions and finishes, and are compatible with all New Traditions leversets and knobsets. The 800 series deadbolts offer excellent strength and reliability, certified to an ANSI Grade 3.

New Traditions® Deadbolts

NEW TRADITIONS®

FUNCTIONS

FUNCTION	NO.	DESCRIPTION
	810	DUMMY: No cylinder, no latch
	820	SINGLE CYLINDER: Latch operated from the outside by key, inside by T-turn.
	840	DOUBLE CYLINDER: Latch operated from either side by the key.
	860	ONE SIDED DEADBOLT WITH PLATE: No cylinder. Latch operated by the T-turn on the inside. For doors bored completely through.
	880	ONE WAY: No cylinder. Latch operated by the T-turn on the inside. For doors not bored completely through.

DIMENSIONS	A	B	C
800 Interior	$2\frac{1}{2}$"	$\frac{15}{16}$"	2"
800 Exterior	$2\frac{1}{2}$"	1"	$1\frac{7}{8}$"
820R/820S Interior	$2\frac{1}{2}$"	$\frac{7}{8}$"	$1\frac{5}{16}$"
820R/820S Exterior	$2\frac{1}{2}$"	$\frac{7}{8}$"	$2\frac{1}{2}$"
820M Interior	3"	1"	2"
820M Exterior	3"	$\frac{7}{8}$"	$2\frac{3}{8}$"

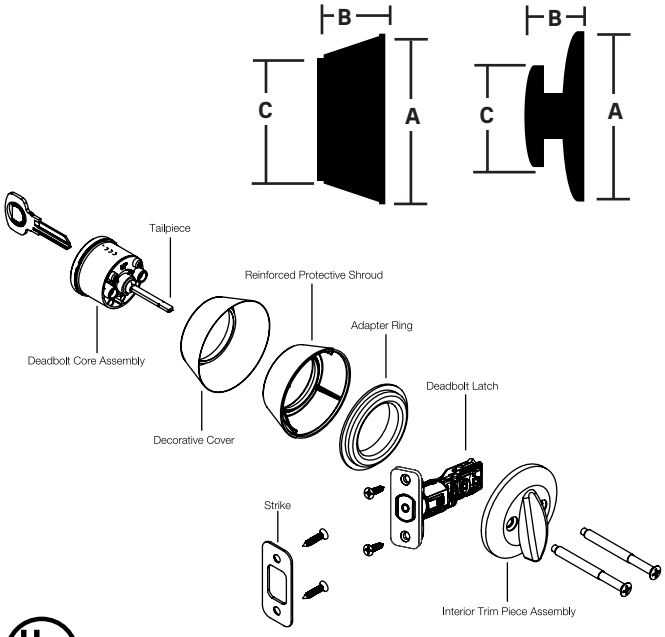

Available with upcharge.

PRODUCT SPECIFICATIONS

Door Specs	$2\frac{1}{8}$" Face Bore, 1" Edge Bore, Box Pack: Latch Face 1" x $2\frac{1}{4}$" Round corner (Square corner optional)
Latch	Box Pack: Adjustable $2\frac{3}{8}$" or $2\frac{3}{4}$" RC (round corner)
Door Thickness	$1\frac{3}{8}$" to $1\frac{3}{4}$"
Cylinder	5 Pin KW-1 Cylinder Standard (SC-1 Optional)
Keying	Box Pack: KA3 (Keyed Alike) Clear Pack: KA3 (Keyed Alike in sets of 3)
Faceplate	1" W x $2\frac{1}{4}$" H RC (Round Corner)
Strike	Box Pack: 1"x$2\frac{1}{4}$" RC RC (Round Corner)
Certified ANSI/BHMA	A156.36, Grade 3 BHMA CERTIFIED
	Meets ADA Guidelines

Standard Case Quantities - Enter the exact number of individual units required. As an example: If there are 24 units in a case and you require 1 case, enter 24 in the "quantity" space. See below for an example of standard case quantities.

STANDARD CASE QUANTITIES (NEW TRADITIONS)	BOX PACK(SP)	CLEAR VIEW(CV)
Dummy	12	6 Pair
Knobs	24	6
Levers	12	6
Deadbolts	12	6
Combo Sets	12	6

New Traditions® Deadbolts

NEW TRADITIONS®

BOX PACK LIST PRICE

800 SERIES DEADBOLTS	FUNCTION	NO BHMA	US3 605	US26D 626	US5 609	US15 619	GM Gun Metal	BSP Black Suede	US26 625	US15A 620	10BE 613E	US10BP
	Dummy	**810**	28.00	28.00	28.00	28.00	N/A	N/A	33.00	33.00	N/A	33.00
	Single Cylinder	**820**	**38.10**	**38.10**	**38.10**	**38.10**	**38.10**	**38.10**	**43.10**	**43.10**	43.10	**43.10**
	Double Cylinder	**840**	**48.00**	**48.00**	**48.00**	**48.00**	**48.00**	**48.00**	53.00	**53.00**	53.00	**53.00**
	One Sided W/Plate	**860**	31.60	**31.60**	**31.60**	**31.60**	31.60	31.60	36.60	36.60	36.60	36.60
	Oneway*	**880**	23.00	**23.00**	23.00	**23.00**	23.00	23.00	29.00	29.00	29.00	29.00
Only available 20 minute UL	**Flat Round Single Cyl****	**820R**	55.60	55.60	55.60	**55.60**	55.60	**55.60**	**59.60**	59.60	59.60	**59.60**
	Flat Square Single Cyl**	**820S**	55.60	55.60	55.60	**55.60**	55.60	**55.60**	**59.60**	59.60	59.60	**59.60**
	Modern Single Cyl **	**820M**	N/A	N/A	N/A	**55.60**	N/A	**55.60**	N/A	N/A	N/A	**59.60**

*880 deadbolt available fixed latch only. 2-3/8 RC is Std.
**Only available 20 minute UL

STRIKES - AVAILABLE OPTIONS - BOX PACK ONLY

ITEM	CORNER SPECS	MODEL NO	LIST PRICE UPCHARGE
Standard 1" - 2 1/4" /SC Strike	Square Corner	YR02082	N/C when specified
Standard 1" - 2 1/4" /RC Strike	Round Corner	YR02080	N/C when specified
1 1/8" - 2 3/4" /SC Strike	Square Corner	YR02086	N/C when specified
1 1/8" - 2 3/4" /RC Strike	Round Corner	YR02088	N/C when specified
1 1/4" - 3 5/8" /RC Maximum Security Strike	Square Corner	YR02081	Add $1.00
1 1/4" - 3 5/8" /SC Maximum Security Strike	Round Corner	YR02083	Add $1.00
1 3/4" - 2 1/4" /RC Full Lip Strike	Round Corner	YR02084	N/C when specified
Screw Pack (4 each 3" Screws)		08818*	1.50

* Specify finish when ordering

AVAILABLE OPTIONS – BOX PACK ONLY		LIST PRICE UPCHARGE
Clearview Packaging (Levers are KA2, Knobs are KA3)		3.00
UL 90 Minute listing		6.00
UL 90 Minute listing	Combo Sets	12.00

YALE NEW TRADITIONS CLEARVIEW PROGRAM

			US3	US15	10BP
Horizon	Dummy- Pair		**28.00**	**28.00**	
	Passage	RCADJ/RCS	**30.80**	**30.80**	
	Privacy	RCADJ/RCS	**33.50**	**33.50**	
	Entry KA3	SC-1 KA3/RCADJ/RCS	**41.10**	**41.10**	
	Combo /820	SC-1 KA3/RCADJ/RCS:020896	**79.20**	**79.20**	
Oasis	Dummy- Pair			**30.00**	**32.00**
	Passage	RCADJ/RCS		**32.40**	**34.40**
	Privacy	RCADJ/RCS		**35.70**	**37.70**
	Entry KA3	SC-1 KA3/RCADJ/RCS		**44.40**	**46.40**
	Combo /820	SC-1 KA3/RCADJ/RCS: 020896		**82.50**	
	Combo /820	SC-1 KA3/RCADJ/RCS: 020891			**105.10**
Niagara	Dummy- Pair			**42.20**	**45.20**
	Passage	RCADJ/RCS: 020896		**49.40**	**52.40**
	Privacy	RCADJ/RCS: 020896		**51.40**	**54.40**
	Entry KA3	SC-1 KA3/RCADJ/RCS: 020896		**70.60**	**73.60**
Woodland	Dummy- Pair			**42.20**	
	Passage	RCADJ/RCS: 020896		**49.40**	
	Privacy	RCADJ/RCS: 020896		**51.40**	
	Entry KA3	SC-1 KA3/RCADJ/RCS: 020896		**70.60**	
Vidalia	Dummy- Pair			**42.20**	**45.20**
	Passage	RCADJ/RCS: 020896		**49.40**	**52.40**
	Privacy	RCADJ/RCS: 020896		**51.40**	**54.40**
	Entry KA3	SC-1 KA3/RCADJ/RCS: 020896		**70.60**	**73.60**
820 Sgl Cyl Deadbolt	Deadbolt	SC-1 KA3/RCADJ/RCS: 020896	**41.10**	**41.10**	
	Deadbolt	SC-1 KA3/RCADJ/RCS: 020891			**46.10**

All clearview must be ordered in full carton multiples. Packaged 6 per carton.
$150.00 + is freight free.
Clearview product stock in Berlin with SC-1 cylinder only.

New Traditions®
Latch Price List

NEW TRADITIONS®

		BOX PACK LIST PRICE			
INTERIOR SPRING LATCHES	**DESCRIPTION**	**DIMENSION**	**CORNER SPECS**	**MODEL NO**	**LIST PRICE**
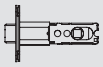	2 3/8"-2 3/4" Adj. Spring Latch	1 x 2 1/4"	Square Corner	YR01464*	6.00
	2 3/8"-2 3/4" Adj. Spring Latch	1 x 2 1/4"	Round Corner	YR01461*	6.00
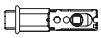	2 3/8"-2 3/4" Drive-In Spring Latch	1" Dia.	N/A	YR01D71*	10.20
EXTERIOR DEADLOCKING LATCHES	**DESCRIPTION**	**DIMENSION**	**CORNER SPECS**	**MODEL NO**	**LIST PRICE**
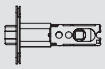	2 3/8"-2 3/4" Adj. Deadlocking Latch	1 x 2 1/4"	Square Corner	YR01474*	7.00
	2 3/8"-2 3/4" Adj. Deadlocking Latch	1 x 2 1/4"	Round Corner	YR01471*	7.00
	2 3/8"-2 3/4" Adj. Deadlocking Drive.-In Latch	1" Dia.	N/A	YR01D33*	10.20
DEADBOLT LATCHES **880 Deadbolt Only**	**DESCRIPTION**	**DIMENSION**	**CORNER SPECS**	**MODEL NO**	**LIST PRICE**
	2 3/8" Deadbolt Latch	1 x 2 1/4"	Square Corner	YR01445*	10.20
	2 3/8" Deadbolt Latch	1 x 2 1/4"	Round Corner	YR01442*	10.20
	2 3/8" Deadbolt Drive-In Latch	1" Dia.	N/A	YR01448*	10.20
	2 3/4" Deadbolt Latch	1 x 2 1/4"	Square Corner	YR01446*	10.20
	2 3/4" Deadbolt Latch	1 x 2 1/4"	Round Corner	YR01443*	10.20
	2 3/4" Deadbolt Drive-In Latch	1" Dia.	N/A	YR01449*	10.20
ADJUSTABLE DEADBOLT LATCHES **820, 840, 860 Deadbolts & Handlesets**	**DESCRIPTION**	**DIMENSION**	**CORNER SPECS**	**MODEL NO**	**LIST PRICE**
	2 3/8"-2 3/4" Adj. Deadbolt Latch		Square Corner	YR01D44*	10.20
	2 3/8"-2 3/4" Adj. Deadbolt Latch		Round Corner	YR01D41*	10.20
	2 3/8"-2 3/4" Adj. Deadbolt Drive-In Latch	1" Dia.	N/A	YR01D47*	10.20
Latches below for Locks produced before September 2015					
INTERIOR SPRING LATCHES	**DESCRIPTION**	**DIMENSION**	**CORNER SPECS**	**MODEL NO**	**LIST PRICE**
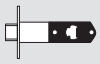	2 3/8"-2 3/4" Adj. Spring Latch	1 x 2 1/4"	Square Corner	YR01414*	6.00
	2 3/8"-2 3/4" Adj. Spring Latch	1 x 2 1/4"	Round Corner	YR01411*	6.00
	2 3/8"-2 3/4" Drive.-In Latch	1" Dia.	N/A	YR01417*	6.00
EXTERIOR DEADLOCKING LATCHES	**DESCRIPTION**	**DIMENSION**	**CORNER SPECS**	**MODEL NO**	**LIST PRICE**
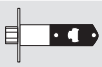	2 3/8"-2 3/4" Adj. Deadlocking Latch	1 x 2 1/4"	Square Corner	YR01424*	6.20
	2 3/8"-2 3/4" Adj. Deadlocking Latch	1 x 2 1/4"	Round Corner	YR01421*	6.20
	2 3/8"-2 3/4" Adj. Deadlocking Drive.-In Latch	1" Dia.	N/A	YR01427*	6.20

***Specify finish when ordering**

Decorative Handlesets

Homestead

Jamestown

McKinley

Pedestal

Rainier

Ridgefield

Teton

Our decorative handlesets combine elegance with ease of installation. These designs offer balanced torque springs on a split-hub for ease of opening, solid thumb pieces, and finishes utilizing the world's most advanced clear coat technology. Designed to fit most American-made doors, each handleset comes with easy-to-read installation instructions.

Decorative Handlesets

FUNCTIONS

FUNCTION	NO.	DESCRIPTION
	681 682 986 987 988 989	DUMMY: For on-working side of double doors. Non-functioning deadbolt, knob or lever.
	621 622 926 927 928 929	SINGLE CYLINDER: Thumbpiece retracts latch from exterior side. Knob or lever retracts latch from interior side. Deadbolt latch retracts with key from exterior side, T-turn retracts deadbolt latch from interior side.
	641 642 946 947	DOUBLE CYLINDER: Thumbpiece retracts latch from exterior side. Knob or lever retracts latch from interior side. Deadbolt latch retracts with key from exterior side and interior side.

PRODUCT SPECIFICATIONS

Door Specs	2⅜" Face Bore, 1" Edge Bore, 5½" O.C. Box Pack: Latch Face 1" x 2¼" RC (Round Corner)
Latch	Box Pack: 2⅜" RC (Round Corner) Deadbolt: 2⅜"–2¾" ADJ. RC (Round Corner) Deadbolt: 2⅜"–2¾" ADJ. RC (Round Corner)
Door Thickness	1¾" 2" to 2¼" Requires Ext. Kit 07600
Cylinder Keying	KW-1 Compatible Box Pack: KD (Keyed Different)
Faceplate	1" W x 2¼" H RC (Round Corner)
Strike	Box Pack: Spring latch 2¼" Full Lip RC (Round Corner) Deadbolt: 1"x 2¼" RC (Round Corner) Deadbolt: 1"x 2¼" RC (Round Corner)
Interior Trim	Specify Interior Trim Style

DIMENSIONS	A	B	C	D
Homestead	2⅜"	5½"	9¹¹⁄₁₆"	18"
Jamestown	2⅜"	5½"	9¹¹⁄₁₆"	18"
McKinley	2⅜"	5½"	9¹¹⁄₁₆"	18"
Pedestal	2¹¹⁄₁₆"	5½"	9¹¹⁄₁₆"	18½"
Rainier	2⅜"	5½"	9¹¹⁄₁₆"	18"
Ridgefield	2⅜"	5½"	9¹¹⁄₁₆"	18"
Teton	2⅜"	5½"	9¹¹⁄₁₆"	18"

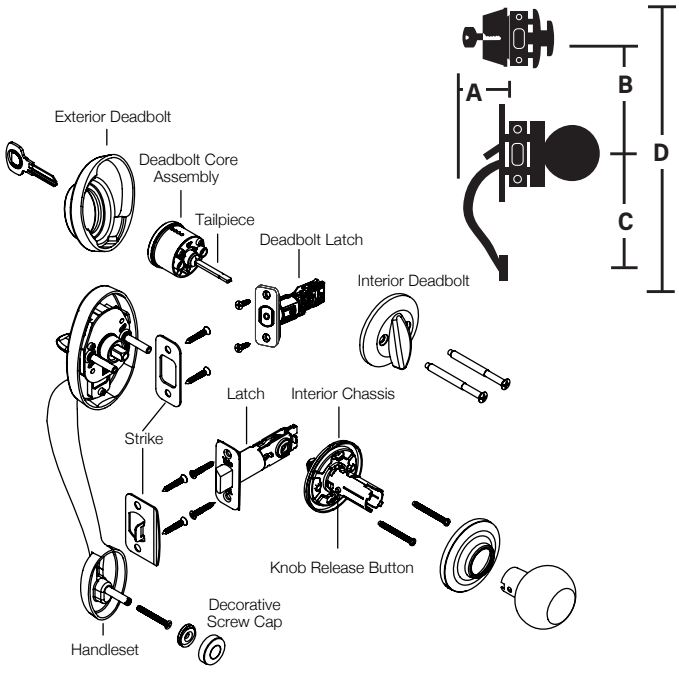

Standard Case Quantities - Enter the exact number of individual units required. As an example: If there are 24 units in a case and you require 1 case, enter 24 in the "quantity" space. See below for an example of standard case quantities.

STANDARD CASE QUANTITIES	BOX PACK(SP)
Handlesets	6
Handlesets - Interior Pack	6

UL - Not available on Yale Handlesets

Decorative Handlesets
Price List

BOX PACK LIST PRICE (PRICE INCLUDES INTERIOR TRIM)

Handlesets - featuring Quick-install Design

DESIGN	FUNCTION BHMA	NO	US3 605	US26 625	US26D 626	US5 609	US15 619	US15A 620	GM Gun Metal	BSP Black Suede	10BE 613E	10BP
Homestead	**Dummy****	**986**	**198.00**	198.00	198.00	198.00	**198.00**	**198.00**	**198.00**	**198.00**	218.00	**218.00**
	Single Cylinder	**926**	**235.00**	235.00	235.00	**235.00**	**235.00**	**235.00**	**235.00**	**235.00**	255.00	**255.00**
	Double Cylinder	**946**	255.00	255.00	255.00	255.00	255.00	255.00	255.00	255.00	275.00	275.00
Jamestown	**Dummy****	**987**	**198.00**	198.00	198.00	198.00	**198.00**	**198.00**	**198.00**	**198.00**	218.00	**218.00**
	Single Cylinder	**927**	**235.00**	235.00	235.00	235.00	**235.00**	**235.00**	**235.00**	**235.00**	255.00	**255.00**
	Double Cylinder	**947**	255.00	255.00	255.00	255.00	255.00	255.00	255.00	255.00	275.00	275.00
McKinley	**Dummy****	**682**	**165.00**	**165.00**	**165.00**	165.00	**165.00**	**165.00**	**165.00**	**165.00**	185.00	**185.00**
	Single Cylinder	**622**	**195.00**	**195.00**	**195.00**	**195.00**	**195.00**	**195.00**	**195.00**	**195.00**	215.00	**215.00**
	Double Cylinder	**642**	215.00	215.00	215.00	215.00	215.00	215.00	215.00	215.00	235.00	235.00
Pedestal*	**Dummy****	**988**	198.00	N/A	N/A	N/A	**198.00**	N/A	N/A	**198.00**	N/A	**218.00**
	Single Cylinder	**928**	235.00	N/A	N/A	N/A	**235.00**	N/A	N/A	**235.00**	N/A	**255.00**
Teton	**Dummy****	**681**	N/A	N/A	N/A	N/A	**165.00**	**165.00**	**165.00**	165.00	N/A	**185.00**
	Single Cylinder	**621**	N/A	N/A	N/A	N/A	**195.00**	**195.00**	**195.00**	195.00	N/A	**215.00**
	Double Cylinder	**641**	N/A	N/A	N/A	N/A	215.00	215.00	215.00	215.00	N/A	235.00
Rainier	**Dummy****	**683**	N/A	165.00	**165.00**	N/A	**165.00**	**165.00**	**165.00**	**165.00**	N/A	**185.00**
	Single Cylinder	**623**	N/A	**195.00**	**195.00**	N/A	**195.00**	**195.00**	**195.00**	**195.00**	N/A	**215.00**
	Double Cylinder	**643**	N/A	215.00	215.00	N/A	215.00	215.00	215.00	215.00	N/A	235.00
Ridgefield*	**Dummy****	**989**	N/A	N/A	N/A	N/A	**198.00**	N/A	N/A	**198.00**	N/A	**218.00**
	Single Cylinder	**929**	N/A	N/A	N/A	N/A	**235.00**	N/A	N/A	**235.00**	N/A	**255.00**

NOTE: Handleset Interior Trim - Selection Chart Below.
***Pedestal and Ridgefield ships with Cambridge knob as standard. Split finish not available.**
****Stocked with knob (included)**

INTERIOR TRIM ASSEMBLIES	ITEM	MODEL NO	LIST PRICE*
YH Collection	**Dummy**	**719**	20.00
	Single Cylinder Deadbolt	**720**	**25.00**
	Double Cylinder Deadbolt	**740**	**30.00**
New Traditions	**Dummy**	**680**	20.00
	Single Cylinder Deadbolt	**620**	**25.00**
	Double Cylinder Deadbolt	**640**	**30.00**
	Vidalia/Valdosta SQR Rose		**33.00**

***All finishes**
Note: box pack only

AVAILABLE OPTIONS – BOX PACK ONLY		LIST PRICE UPCHARGE
Page 70,74	Split-Hub Latches	NC when specified
Page 66	800 Series Deadbolt Latches	NC when specified
Page 83	T-Strikes	1.40
Page 83	A.S.A. 47/8" Strike	6.80
Page 83	Deadbolt Security Strikes	.80
Page 83	Other Lockset Strikes	NC when specified
Page 84	Additional keying options	NC when specified
Extension Kit 2 to 2-1/4" YH/NT Handleset (Thick Door Pack) #YR07600		12.60 (specify finish)

Note: When ordering handlesets less interior pack, (LIP) deduct the interior trim assembly list price to determine handleset price. Specify handing when ordering all lever interior trim assemblies.

Decorative Handlesets
Price List

YH COLLECTION INTERIOR TRIM

DESIGN	US3 605	US26 625	US26D 626	US5 609	US15 619	US15A 620	GM Gun Metal	BSP Black Suede	613E (10BE)	10BP
Bridgeport	A	A	A	N/A	A	N/A	N/A	N/A	N/A	N/A
Cambridge	**A**	**A**	**A**	**A**	**A**	**A**	**A**	A	A	**A**
Dartmouth	**A**	N/A	N/A	N/A	**A**	N/A	A	**A**	N/A	**A**
Oxford	A	N/A	N/A	A	**A**	N/A	N/A	A	A	**A**
Academy	N/A	N/A	A	A	**A**	N/A	N/A	N/A	N/A	N/A
Augusta	**A**	N/A	**A**	A	**A**	N/A	N/A	N/A	A	**A**
Delaware	N/A	A	A	N/A	**A**	N/A	N/A	**A**	A	A
Kincaid	**A**	N/A	N/A	N/A	**A**	N/A	N/A	**A**	N/A	**A**
Marina	N/A	**A**	A	N/A	**A**	N/A	A	N/A	A	**A**
McClure	**A**	N/A	A	N/A	**A**	A	N/A	N/A	A	**A**
Monroe	N/A	N/A	A	N/A	A	N/A	N/A	N/A	N/A	N/A
Milan	**A**	**A**	A	N/A	**A**	N/A	N/A	N/A	N/A	N/A
Norwood	**A**	**A**	A	**A**	**A**	**A**	**A**	**A**	A	**A**
Pacific Beach	**A**	A	**A**	A	**A**	N/A	N/A	N/A	N/A	N/A
Valdosta	N/A	**A**	**A**	N/A	**A**	N/A	N/A	**A**	A	A
Valdosta SQR Rose	N/A	N/A	N/A	N/A	**A**	N/A	N/A	**A**	N/A	N/A
Virgo	A	N/A	A	N/A	A	N/A	N/A	N/A	A	A

Specify handing when ordering lever interior trim. With split finish orders, strikes match interior finishes.
A **= Available as factory direct interior pack selection in Handlesets**
A = Available in QuickShip
N/A **= Not available as interior pack selection in YH Collection**

NEW TRADITIONS INTERIOR TRIM

DESIGN	US3 605	US26 625	US26D 626	US5 609	US15 619	US15A 620	GM Gun Metal	BSP Black Suede	613E (10BE)	10BP
Cirrus	**A**	A	**A**	N/A	**A**	A	**A**	N/A	A	**A**
Horizon	**A**	**A**	**A**	**A**	**A**	**A**	**A**	**A**	A	**A**
Oasis	N/A	N/A	N/A	N/A	**A**	N/A	N/A	N/A	N/A	**A**
Terra	N/A	N/A	N/A	N/A	**A**	N/A	A	N/A	N/A	**A**
Valley	A	N/A	A	N/A	N/A	N/A	N/A	N/A	N/A	N/A
Mesa	N/A	N/A	A	A	A	N/A	N/A	N/A	N/A	N/A
Niagara	A	A	A	A	**A**	A	A	**A**	A	**A**
Prairie	N/A	A	A	A	**A**	N/A	N/A	N/A	N/A	N/A
Savannah	**A**	**A**	**A**	A	**A**	**A**	**A**	N/A	A	**A**
Vidalia	A	A	**A**	A	**A**	**A**	**A**	**A**	A	**A**
Woodland	A	**A**	**A**	**A**	**A**	**A**	**A**	**A**	A	**A**
SQR Rose	N/A	N/A	N/A	N/A	**A**	N/A	N/A	**A**	N/A	**A**

Specify handing when ordering lever interior trim. With split finish orders, strikes match interior finishes.
A **= Available as factory direct interior pack selection in Handlesets**
A = Available in QuickShip
N/A **= Not available as interior pack selection in New Traditions**

BOX PACK LIST PRICE

HANDLESET LATCHES - INTERIOR SPLIT HUB SPRING LATCHES	DESCRIPTION	DIMENSION	CORNER SPECS	MODEL NO	LIST PRICE
	2 3/8" Spring Latch	1 x 2 1/4"	Square Corner	YR01804*	12.70
	2 3/8" Spring Latch	1 x 2 1/4"	Round Corner	YR01802*	12.70
	2 3/8" Spring Drive-In Latch	1" Dia.	N/A	YR01803*	12.70
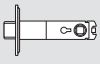	2 3/4" Spring Latch	1 x 2 1/4"	Square Corner	YR01808*	12.70
	2 3/4" Spring Latch	1 x 2 1/4"	Round Corner	YR01806*	12.70
	2 3/4" Spring Drive-In Latch	1" Dia.	N/A	YR01807*	12.70

***Specify finish when ordering**

Decorative Passage Handlesets

Use with Assure® Deadbolts

Homestead

Jamestown

McKinley

Rainier

Ridgefield

Teton

Our decorative handlesets combine elegance with ease of installation. These designs offer balanced torque springs on a split-hub for ease of opening, solid thumb pieces, and finishes utilizing the world's most advanced clear coat technology. Designed to fit most American-made doors, each handleset comes with easy-to-read installation instructions. Can be utilized in conjuncton with Assure® deadbolt product.

Decorative Passage Handlesets

FUNCTIONS

FUNCTION	NO.	DESCRIPTION
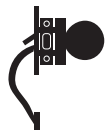	601 602 603 906 907	PASSAGE: Latchbolt is operated by thumpiece at all times. Thumbpiece retracts latch from exterior side. Knob or lever retracts latch from interior side.

DIMENSIONS	A	C
Homestead	2⅜"	9$^{11}/_{16}$"
Jamestown	2⅜"	9$^{11}/_{16}$"
McKinley	2⅜"	9$^{11}/_{16}$"
Rainier	2⅜"	9$^{11}/_{16}$"
Ridgefield	2⅜"	9$^{11}/_{16}$"
Teton	2⅜"	9$^{11}/_{16}$"

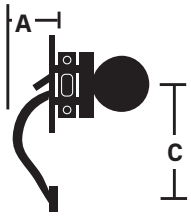

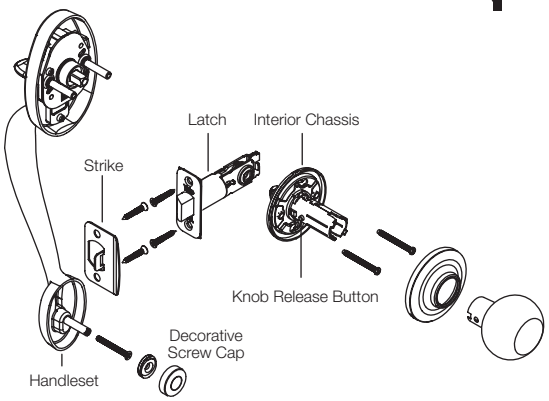

PRODUCT SPECIFICATIONS

Door Specs	2⅛" Face Bore, 1" Edge Bore, 5½" O.C. Box Pack: Latch Face 1" x 2¼" RC (Round Corner)
Latch	Box Pack: 2⅜" RC (Round Corner) Deadbolt: 2$^{3}/_{8}$"–2$^{3}/_{4}$" ADJ. RC (Round Corner) Deadbolt: 2⅜"–2¾" ADJ. RC (Round Corner)
Door Thickness	1¾" 2" to 2¼" Requires Ext. Kit 07600
Faceplate	1" W x 2¼" H RC (Round Corner)
Strike	Box Pack: Spring latch 2¼" Full Lip RC (Round Corner)
Interior Trim	Specify Interior Trim Style

Standard Case Quantities - Enter the exact number of individual units required. As an example: If there are 24 units in a case and you require 1 case, enter 24 in the "quantity" space. See below for an example of standard case quantities.

STANDARD CASE QUANTITIES	BOX PACK(SP)
Handlesets	6
Handlesets - Interior Pack	6

UL - Not available on New Traditions from Yale Handlesets

Decorative Passage Handlesets
Price List

BOX PACK LIST PRICE (PRICE INCLUDES INTERIOR TRIM)						
Handlesets **Featuring Quick Install Design**	DESIGN	FUNCTION NO BHMA	US3 605	10BP	US15 619	BSP
Homestead	**Passage**	**906**	**182.00**	**195.00**	**182.00**	N/A
Jamestown	**Passage**	**907**	**182.00**	**195.00**	**182.00**	N/A
McKinley	**Passage**	**602**	**160.00**	**165.00**	**160.00**	N/A
Teton	**Passage**	**601**	N/A	**165.00**	**160.00**	N/A
Rainier	**Passage**	**603**	N/A	**175.00**	**165.00**	N/A
Ridgefield*	**Passage**	**909**	**182.00**	**195.00**	**182.00**	**182.00**

NOTE: Handleset Interior Trim - Selection Chart Below.
***Ridgefield ships with Cambridge knob as standard. Split finish not available.**

INTERIOR TRIM ASSEMBLIES	ITEM	MODEL NO	LIST PRICE*
YH Collection	**Interior Pack**	**720**	**25.00**
New Traditions	**Interior Pack**	**620**	**25.00**

***All finishes**
Note: box pack only

AVAILABLE OPTIONS – BOX PACK ONLY		LIST PRICE UPCHARGE
Page 70,74	Split-Hub Latches	SC or DI no charge when specified
Page 83	T-Strikes	1.40
Page 83	A.S.A. $4^{7}/_{8}$" Strike	6.80
Extension Kit 2 to $2^{1}/_{4}$" YH/NT Handleset (Thick Door Pack) #YR07600		12.60 (specify finish)

Note: When ordering handlesets less interior pack, (LIP) deduct the interior trim assembly list price to determine handleset price. Specify handing when ordering all lever interior trim assemblies.

Decorative Passage Handlesets
Price List

YH COLLECTION INTERIOR TRIM

DESIGN	US3 605	US26 625	US26D 626	US5 609	US15 619	US15A 620	GM Gun Metal	BSP Black Suede	613E (10BE)	10BP
Bridgeport	A	A	A	N/A	**A**	N/A	N/A	N/A	N/A	N/A
Cambridge	**A**	**A**	**A**	**A**	**A**	**A**	**A**	A	A	**A**
Dartmouth	**A**	N/A	N/A	N/A	**A**	N/A	A	**A**	N/A	**A**
Oxford	A	N/A	N/A	A	**A**	N/A	N/A	A	A	**A**
Academy	N/A	N/A	A	A	**A**	N/A	N/A	N/A	N/A	N/A
Augusta	**A**	N/A	**A**	A	**A**	N/A	N/A	N/A	A	**A**
Delaware	N/A	A	A	N/A	**A**	N/A	N/A	**A**	A	A
Kincaid	**A**	N/A	N/A	N/A	**A**	N/A	N/A	**A**	N/A	**A**
Marina	N/A	**A**	A	N/A	**A**	N/A	A	N/A	A	**A**
McClure	**A**	N/A	A	N/A	**A**	A	N/A	N/A	A	**A**
Monroe	N/A	N/A	A	N/A	A	N/A	N/A	N/A	N/A	N/A
Milan	**A**	**A**	A	N/A	**A**	N/A	N/A	N/A	N/A	N/A
Norwood	**A**	**A**	A	**A**	**A**	**A**	**A**	**A**	A	**A**
Pacific Beach	**A**	A	**A**	A	**A**	N/A	N/A	N/A	N/A	N/A
Valdosta	N/A	**A**	**A**	N/A	**A**	N/A	N/A	**A**	A	A
Valdosta SQR Rose	N/A	N/A	N/A	N/A	**A**	N/A	N/A	**A**	N/A	N/A
Virgo	A	N/A	A	N/A	A	N/A	N/A	N/A	A	A

Specify handing when ordering lever interior trim. With split finish orders, strikes match interior finishes.
A **= Available as factory direct interior pack selection in Handlesets**
A = Available in QuickShip
N/A **= Not available as interior pack selection in YH Collection**

NEW TRADITIONS INTERIOR TRIM

DESIGN	US3 605	US26 625	US26D 626	US5 609	US15 619	US15A 620	GM Gun Metal	BSP Black Suede	613E (10BE)	10BP
Cirrus	**A**	A	**A**	N/A	**A**	A	**A**	N/A	A	**A**
Horizon	**A**	**A**	**A**	**A**	**A**	**A**	**A**	**A**	A	**A**
Oasis	N/A	N/A	N/A	N/A	**A**	N/A	N/A	N/A	N/A	**A**
Terra	N/A	N/A	N/A	N/A	**A**	N/A	A	N/A	N/A	**A**
Valley	A	N/A	A	N/A	N/A	N/A	N/A	N/A	N/A	N/A
Mesa	N/A	N/A	A	A	A	N/A	N/A	N/A	N/A	N/A
Niagara	A	A	A	A	**A**	A	A	**A**	A	**A**
Prairie	N/A	A	A	A	**A**	N/A	N/A	N/A	N/A	N/A
Savannah	**A**	**A**	**A**	A	**A**	**A**	**A**	A	A	**A**
Vidalia	A	A	**A**	A	**A**	**A**	**A**	**A**	A	**A**
Woodland	A	**A**	**A**	**A**	**A**	**A**	**A**	**A**	A	**A**
Square Rose	N/A	N/A	N/A	N/A	**A**	N/A	N/A	**A**	N/A	**A**

Specify handing when ordering lever interior trim. With split finish orders, strikes match interior finishes.
A **= Available as factory direct interior pack selection in Handlesets**
A = Available in QuickShip
N/A **= Not available as interior pack selection in New Traditions**

BOX PACK LIST PRICE

HANDLESET LATCHES - INTERIOR SPLIT HUB SPRING LATCHES	DESCRIPTION	DIMENSION	CORNER SPECS	MODEL NO	LIST PRICE
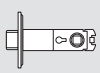	2 3/8" Spring Latch	1 x 2 1/4"	Square Corner	YR01804*	12.70
	2 3/8" Spring Latch	1 x 2 1/4"	Round Corner	YR01802*	12.70
	2 3/8" Spring Drive-In Latch	1" Dia.	N/A	YR01803*	12.70
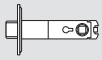	2 3/4" Spring Latch	1 x 2 1/4"	Square Corner	YR01808*	12.70
	2 3/4" Spring Latch	1 x 2 1/4"	Round Corner	YR01806*	12.70
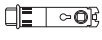	2 3/4" Spring Drive-In Latch	1" Dia.	N/A	YR01807*	12.70

***Specify finish when ordering**

Yale Edge Series®
Knobs and Levers

*NOTE - Not for Use with Commercial Hollow Metal Doors

YE SERIES®

Athens

Sinclair

Waycross

Alpharetta

Keowee

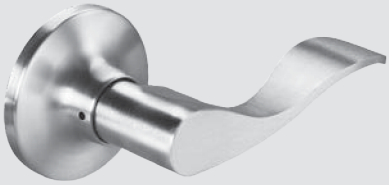

Seabrook

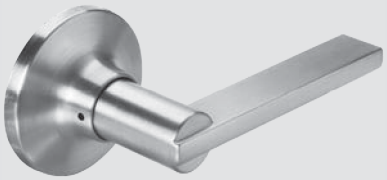

Seabrook with
Square Rose

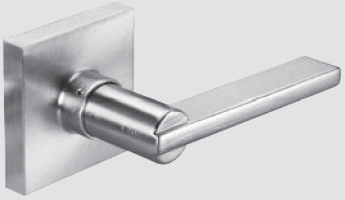

Edisto

Wando

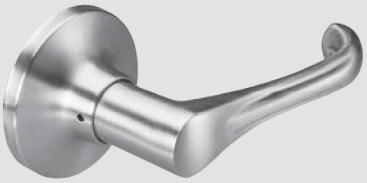

Yale Edge Series offers attractive designs and finishes to meet the needs of today's housing market. All Yale Edge Series product is constructed to meet Grade 3 standards. Designed to fulfill the needs of the hardware market in attractive styles and current popular finishes. Whether your project includes town homes, condos, garden homes, or a single family home, look no further than Yale Edge Series to fulfill your door hardware needs with the Yale brand.

NOTE: Yale Edge Products ship from the QuickShip warehouse in Berlin, CT Only. Freight minimums are separate from AAG Factory items.

Yale Edge Series®
Knobs and Levers

YE SERIES®

FUNCTIONS

FUNCTION	NO.	DESCRIPTION
	80/81	DUMMY: For doors where only pull is required. (handing required Keowee only)
	10/11	PASSAGE: Latchbolt is operated by either knob/lever at all times. (levers: non-handed)
	20/21	PRIVACY: Latchbolt is operated by either knob/lever except when inside knob is locked by turn button. A coin turn releases turn button and unlocks outside knob/lever. (levers: non-handed)
	23*	PRIVACY: Latchbolt is operated by either lever except when inside lever is locked by Pushbutton. Pushbutton is released by a coin turn on outside or by turning inside lever. (specify handing)
	70	ENTRY KNOB: Guarded Latch bolt operated from outside by key. Inside by knob. Turn button Locks both knobs. Knobs unlock by key outside or by rotating inside turn button.
	71	ENTRY LEVER/LEVER: Guarded latch bolt operated from outside lever by key. Inside by lever. Turn button locks both levers. Levers unlock by key or by turning inside turn button.
	73*	ENTRY (LEVER/LEVER): Guarded latchbolt operated from outside by key; inside by lever. Pushbutton locks outside lever. Outside lever unlocks by key or by turning inside lever. (specify handing)

***ADA – Keypad interior locking**
837 Combo Note: Keyed 70 knob and 82E deadbolt in one box and keyed alike.

DIMENSIONS	A	B	C
Athens	2 7/16"	2 33/64"	2"
Sinclair	2 7/16"	2 3/8"	2 13/64"
Waycross	2 7/16"	2 1/2"	2 7/16"
Alpharetta	2 7/16"	2 1/4"	3 45/64"
Edisto	2 7/16"	2 7/16"	4 7/32"
Keowee	2 7/16"	2 9/16"	4 3/32"
Seabrook	2 7/16"	2 9/16"	4 5/8"
Seabrook SQ	2 1/2"	2 9/16"	4 5/8"
Wando	2 7/16"	2 1/2"	4 5/8"

PRODUCT SPECIFICATIONS

Door Specs	2 1/8" Face Bore, 1" Edge Bore, 2 3/8" or 2 3/4" Backset Latch Face 1" x 2 1/4" RC (Round Corner)
Latch	RC Adjustable only for 2 3/8" or 2 3/4" Backset
Door Thickness	1 3/8" to 1 3/4" (includes handleset)
Cylinder	5 Pin Cylinder (KW-1 Compatible) SC-1 Cylinder (availability: Keowee, Sinclair, Seabrook, Lenoir and deadbolts; US15 and 10BP finishes)
Keying	KA5
Faceplate	1" W x 2 1/4" H RC (Round Corner)
Strike	2 1/4" Full Lip RC (Round Corner)
Deadbolts	Meets ADA Guidelines

Standard Case Quantities - Enter the exact number of individual units required. As an example: If there are 30 units in a case and you require 1 case, enter 30 in the "quantity" space. See below for an example of standard case quantities.

STANDARD CASE QUANTITIES (YE SERIES)

	Box Pack(SP)
Dummy	30
Knobs	30
Levers	20
Deadbolts	30
Combo Sets	10
Handlesets	6

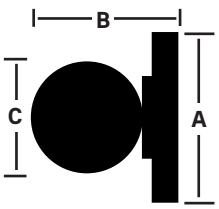

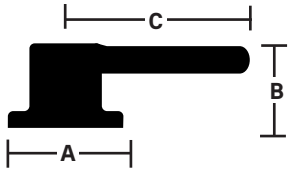

Yale Edge Series®
Knob and Lever Price List

		BOX PACK LIST PRICE							
DESIGN	**FUNCTION**	**NO**	**US3**	**10BP**	**US15**	**US32D**	**BLK**	**US26**	**US26D**
	BHMA		**605**		**619**	**630**		**625**	**626**
Athens (AT)	Dummy	**80**	**10.50**	**13.10**	**10.50**	**10.50**	N/A	N/A	N/A
	Passage	**10**	**24.10**	**28.80**	**24.10**	**24.10**	N/A	N/A	N/A
	Privacy	**20**	**25.50**	**29.50**	**25.50**	**25.50**	N/A	N/A	N/A
	Entry	**70**	**28.90****	**33.50****	**28.90****	**28.90****	N/A	N/A	N/A
	Combo	**837**	**57.40**	**67.40**	**57.40**	**57.40**	N/A	N/A	N/A
Sinclair (SN)	Dummy	**80**	**10.50**	**13.10**	**10.50**	N/A	**10.50**	N/A	N/A
	Passage	**10**	**24.10**	**28.80**	**24.10**	N/A	**24.10**	N/A	N/A
	Privacy	**20**	**25.50**	**29.50**	**25.50**	N/A	**25.50**	N/A	N/A
	Entry	**70**	**28.90****	**33.50****	**28.90****	N/A	**28.90****	N/A	N/A
	Combo	**837**	**57.40**	**67.40**	**57.40**	N/A	**57.40**	N/A	N/A
Waycross (WA)	Dummy	**80**	N/A	**13.20**	**12.20**	N/A	**12.20**	N/A	N/A
	Passage	**10**	N/A	**29.90**	**27.20**	N/A	**27.20**	N/A	N/A
	Privacy	**20**	N/A	**30.90**	**28.00**	N/A	**28.00**	N/A	N/A
	Entry	**70**	N/A	**34.60**	**31.50**	N/A	**31.50**	N/A	N/A
	Combo	**837**	N/A	N/A	N/A	N/A	N/A	N/A	N/A
Alpharetta (AL)	Dummy	**81**	**18.00**	**20.80**	**18.00**	N/A	N/A	N/A	N/A
	Passage	**11**	**36.90**	**41.60**	**36.90**	N/A	N/A	N/A	N/A
	Privacy	**21**	**38.00**	**43.50**	**38.00**	N/A	N/A	N/A	N/A
	Entry	**71**	**49.80**	**56.40**	**49.80**	N/A	N/A	N/A	N/A
	Privacy-ADA*	**23**	N/A	N/A	**41.80**	N/A	N/A	N/A	N/A
	Entry-ADA*	**73**	N/A	N/A	**53.70**	N/A	N/A	N/A	N/A
Edisto (ED)	Dummy	**81**	N/A	**20.80**	**18.00**	N/A	N/A	N/A	**18.00**
	Passage	**11**	N/A	**41.60**	**36.90**	N/A	N/A	N/A	**36.90**
	Privacy	**21**	N/A	**43.50**	**38.00**	N/A	N/A	N/A	**38.00**
	Entry	**71**	N/A	**56.40**	**49.80**	N/A	N/A	N/A	**49.80**
	Privacy-ADA*	**23**	N/A	N/A	**41.80**	N/A	N/A	N/A	**41.80**
Keowee (KW)	Dummy	**81**	**18.00**	**20.80**	**18.00**	N/A	**18.00**	N/A	N/A
	Passage	**11**	**36.90**	**41.60**	**36.90**	N/A	**36.90**	N/A	N/A
	Privacy	**21**	**38.00**	**43.50**	**38.00**	N/A	**38.00**	N/A	N/A
	Entry	**71**	**49.80**	**56.40**	**49.80**	N/A	**49.80**	N/A	N/A
	Privacy-ADA*	**23**	N/A	**47.40**	**41.80**	N/A	N/A	N/A	N/A
	Entry-ADA*	**73**	N/A	**60.40**	**53.70**	N/A	N/A	N/A	N/A
Seabrook (SB)	Dummy	**81**	N/A	**20.80**	**18.00**	N/A	N/A	N/A	N/A
	Passage	**11**	N/A	**41.60**	**36.90**	N/A	N/A	N/A	N/A
	Privacy	**21**	N/A	**43.50**	**38.00**	N/A	N/A	N/A	N/A
	Entry	**71**	N/A	**56.40**	**49.80**	N/A	N/A	N/A	N/A
	Privacy-ADA*	**23**	N/A	**47.40**	**41.80**	N/A	N/A	N/A	N/A
Seabrook SQR Rose (SBSQ)	Dummy	**81**	N/A	**27.20**	**23.40**	N/A	**23.40**	**23.40**	N/A
	Passage	**11**	N/A	**53.60**	**46.70**	N/A	**46.70**	**46.70**	N/A
	Privacy	**21**	N/A	**56.50**	**49.10**	N/A	**49.10**	**49.10**	N/A
	Entry	**71**	N/A	**69.40**	**62.30**	N/A	**62.30**	**62.30**	N/A
Wando (WD)	Dummy	**81**	N/A	**20.80**	**18.00**	N/A	N/A	N/A	N/A
	Passage	**11**	N/A	**41.60**	**36.90**	N/A	N/A	N/A	N/A
	Privacy	**21**	N/A	**43.50**	**38.00**	N/A	N/A	N/A	N/A
	Entry	**71**	N/A	**56.40**	**49.80**	N/A	N/A	N/A	N/A
	Privacy-ADA*	**23**	N/A	N/A	**41.80**	N/A	N/A	N/A	N/A

Note: Only Keowee Dummy and interior trim packs are handed.
*ADA – Keypad interior locking
**Specify KW-1 or SC-1 compatible cylinder.

Yale Edge Series®
Deadbolts and Handlesets

Lenoir

Johns Creek

Meyer Park

Deadbolt One Sided with Plate

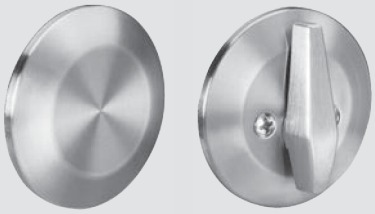

Deadbolt One Way

Square Deadbolt

Standard Single Deadbolt

Yale Edge Series offers attractive designs and finishes to meet the needs of today's housing market. All Yale Edge Series product is constructed to meet Grade 3 standards. Designed to fulfill the needs of the hardware market in attractive styles and current popular finishes. Whether your project includes town homes, condos, garden homes, or a single family home, look no further than Yale Edge Series to fulfill your door hardware needs with the Yale brand.

NOTE: Yale Edge Products ship from the QuickShip warehouse in Berlin, CT Only. Freight minimums are separate from AAG Factory items.

Yale Edge Series®
Deadbolts and Handlesets

FUNCTIONS

FUNCTION	NO.	DESCRIPTION
	82E 82ESQ	SINGLE CYLINDER: Latch operated from the outside by key, inside by T-turn.
	860E	ONE SIDED DEADBOLT WITH PLATE: No cylinder. Latch operated by the T-turn on the inside. For doors bored completely through.
	880E	ONE WAY DEADBOLT: No cylinder. Latch operated by the T-tum on the inside. For doors not bored completely through.
	927E 928E 929E	SINGLE CYLINDER: Thumbpiece retracts latch from exterior side. Knob or lever retracts latch from interior side. Deadbolt latch retracts with key from exterior side, T-turn retracts deadbolt latch from interior side.

DIMENSIONS	A	B	C
Deadbolt Interior	2 1/2"	15/16"	2"
Deadbolt Exterior	2 1/2"	1"	1 7/8"
Square Deadbolt Interior	2 1/2"	7/8"	1 15/16"
Square Deadbolt Exterior	2 1/2"	7/8"	2 1/2"

DIMENSIONS	A	B	C	D
Johns Creek	2¾"	5½"	8½"	19¼"
Lenoir	2 31/64"	5½"	8⅜"	18"
Meyers Park	2⅜"	5½"	8½"	19⅜"

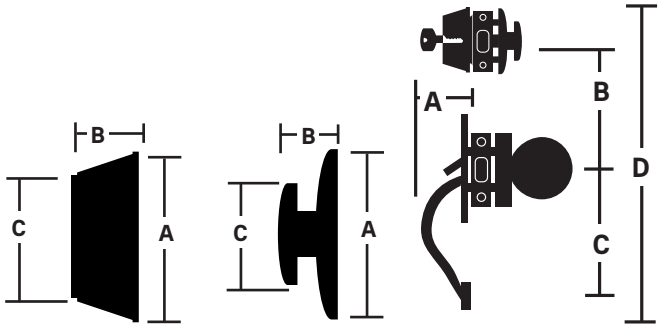

1-3/8" to 1-3/4" door thickness

HOW TO DETERMINE HANDING OF DOORS

- The handing of a door is always determined by facing the exterior of a door.
- If the hinge is on the left side of the door, the door is left handed (LH).
- If the hinge is on the right side of the door, the door is right handed (RH).
- To order a handed product, specify LH or RH.
  Not all products are handed; only specify handing when required.

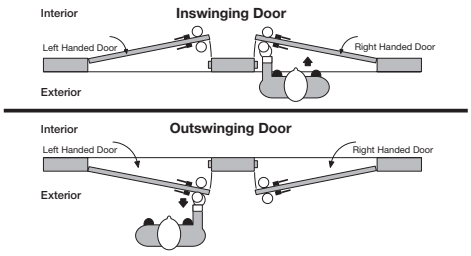

ADA, Dummies, and Interior Packs require handing. Handing required for Keowee.

Yale Edge Series®
Deadbolts and Handlesets

			BOX PACK LIST PRICE					
DESIGN	FUNCTION	NO	US3	10BP	US15	US32D	BLK	US26D
	BHMA		605		619	630		626
Deadbolt	Single Cylinder	82E	28.50**	33.80	28.50**	28.50	28.50**	28.50
Deadbolt SQ	Single Cylinder	82ESQ	N/A	59.20**	49.30**	N/A	49.30**	N/A
Deadbolt	Oneside w/plate	860E	N/A	19.70	18.30	N/A	N/A	18.30
Deadbolt	Oneway	880E	N/A	16.30	15.80	N/A	N/A	15.80
Johns Creek	Handleset	929E	N/A	158.00**	158.00**	N/A	N/A	
(JC)	Note: Price includes interior trim. Sinclair interior only.							
Lenoir	Handleset	927E	158	158.00**	158.00**	N/A	158.00**	
(LN)	Note: Price includes interior trim							
Meyers Park	Handleset	928E	N/A	158.00**	158.00**	N/A	N/A	
(MP)	Note: Price includes interior trim							
Available Interior Trim	Athens		A	A	N/A	A	N/A	
	Sinclair		N/A	A	A	N/A	A	
	Waycross		N/A	A	A	N/A	N/A	
	Alpharetta		A	A	A	N/A	N/A	
	Edisto		N/A	N/A	N/A	N/A	N/A	
	Keowee		N/A	A	A	N/A	N/A	
	Seabrook*		N/A	A	A	N/A	A	
	Wando		N/A	A	A	N/A	N/A	
Interior Trim	(Priced separately)	720E	25.00	25.00	25.00	25.00	25.00	

*Round rose only.
**Specify KW-1 or SC-1 compatible cylinder.

Yale Edge Series®
Accessories

YALE EDGE SERIES DRIVE IN LATCH			
Description	**Qty**	**Model No.**	
YE Drive In Adjustable Pass/Priv Latch US26 Knob	1	YR01B176	**7.00**
YE Drive In Adjustable Pass/Priv Latch US26 Lever	1	YR01B176L	**7.00**
YE Drive In Adjustable Entry Latch US26 Knob	1	YR01B276	**7.00**
YE Drive In Adjustable Entry Latch US26 Lever	1	YR01B276L	**7.00**
YE Drive In Adjustable Deadbolt Latch US26	1	YR01B476	**7.00**

YALE EDGE SERIES ROUND CORNER ADJUSTABLE LATCH			
Description	**Qty**	**Model No.**	
YE Round Corner Adjustable Pass/Priv Latch US26 Knob	1	YR01B146	**7.00**
YE Round Corner Adjustable Pass/Priv Latch US26 Lever	1	YR01B156	**7.00**
YE Round Corner Adjustable Entry Latch US26 Knob	1	YR01B246	**7.00**
YE Round Corner Adjustable Entry Latch US26 Lever	1	YR01B256	**7.00**
YE Round Corner Adjustable Deadbolt Latch US26	1	YR01B446	**7.00**
YE Round Corner Adjustable Pass/Priv Latch 10BP Knob	1	YR01B14K	**7.00**
YE Round Corner Adjustable Pass/Priv Latch 10BP Lever	1	YR01B15K	**7.00**
YE Round Corner Adjustable Entry Latch 10BP Knob	1	YR01B24K	**7.00**
YE Round Corner Adjustable Entry Latch 10BP Lever	1	YR01B25K	**7.00**
YE Round Corner Adjustable Deadbolt Latch 10BP	1	YR01B44K	**7.00**

YALE EDGE SERIES CYLINDER			
Description	**Qty**	**Model No.**	
YE Sinclair Entry Cylinder & 2 keys KW US15	1	YR06B00N	**15.00**
YE Lever Entry Cylinder & 2 keys KW US15	1	YR06B01N	**15.00**
YE Lever ADA Entry Cylinder & 2 keys KW US15	1	YR06B02N	**15.00**
YE Deadbolt Cylinder & 2 keys KW US15	1	YR06B10N	**15.00**

Pocket Door Locks

YE SERIES®

Privacy

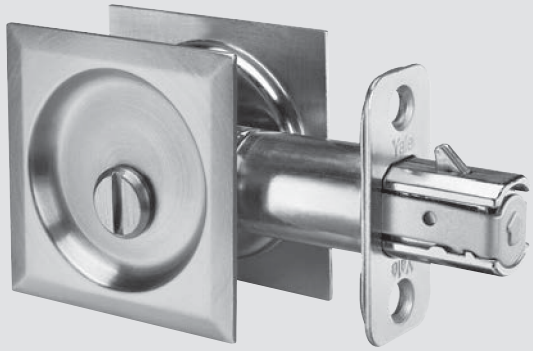

Privacy

Passage

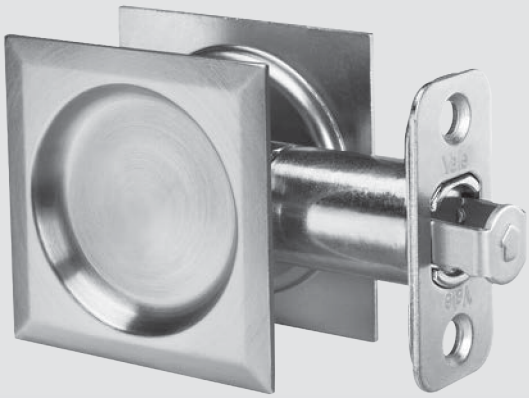

Passage

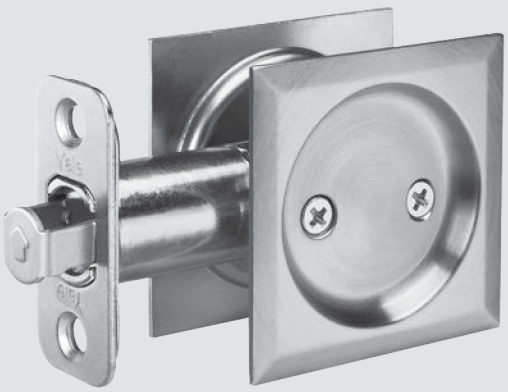

Installs with just a screwdriver on pocket doors for automatic latching. Just close the door and it is latched. Unlock with a thumbturn on the interior. Universal handing, one lock functions in both right or left slide direction.

PRODUCT SPECIFCATIONS	
Door Specs	Fits both 1 3/8" and 1 3/4" doors 2 3/8" backset only Used standard 2 1/8" facebore and 1" edge bore.

BOX PACK LIST PRICE				
FUNCTION	NO	10BP	US15	BLK
BHMA			619	
Passage	**10PD**	**27.00**	**27.00**	**27.00**
Privacy	**20PD**	**28.00**	**28.00**	**28.00**

YH & NT Accessories

Strikes

LOCKSET STRIKES				
ITEM	**DIMENSIONS**	**CORNER SPECS**	**MODEL NO**	**LIST PRICE**
Standard Full Lip Strike/SC	1¾" x 2¼"	Square Corner	YR02001*	**2.00**
Standard Full Lip Strike/RC	1¾" x 2¼"	Round Corner	YR02000*	**2.00**
T-Strike	1⅛" x 2¾"	Square Corner	YR02020*	**3.00**
A.S.A. 4⅞"	1¼" x 4⅞"	Square Corner	YR02030*	**8.50**

* Specify finish when ordering
Note: Not all finishes available

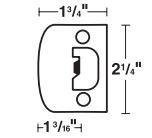

Standard Full Lip/SCS
YR02001*

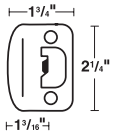

Standard Full Lip/RCS
YR02000*

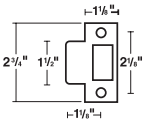

T-Strike
YR02020*

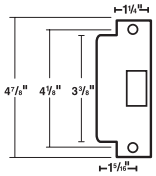

A.S.A. 4⅞"
YR02030*

DEADBOLT STRIKES			
ITEM	**CORNER SPEC**	**MODEL NO**	**LIST PRICE**
Standard Deadbolt Strike/SC	Square Corner	YR02082*	**2.00**
Standard Deadbolt Strike/RC	Round Corner	YR02080*	**2.00**
Security Strike 3⅝"	Round Corner	YR02081*	**2.60**
Security Strike 3⅝"	Square Corner	YR02083*	**2.60**
Full Lip Deadbolt Strike	Square Corner	YR02085*	**2.00**
Full Lip Deadbolt Strike	Round Corner	YR02084*	**2.00**
Universal Deadbolt Strike	Square Corner	YR02086*	**2.00**
Universal Deadbolt Strike	Radius Corner	YR02088*	**2.00**
White Plastic Dust Box 1" x 2¾" Deadbolt (For Universal Strike)		YR026002	**0.50**
Universal Deadbolt Strike with Security Plate	Radius Corner	YR02089*	**2.70**

*Specify finish when ordering
Note: Not all finishes available

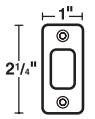

YR02080*

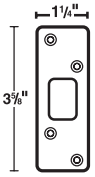

YR02081*

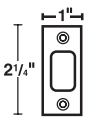

YR02082*

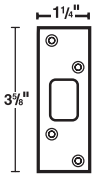

YR02083*

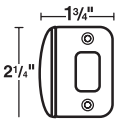

YR02084*

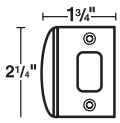

YR02085*

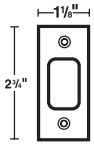

YR02086*

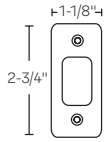

YR02088*

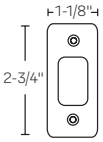

YR02089*

FINISH MATCH FOR LATCH, STRIKE, CYLINDER & SCREWS*
YH Collection, New Traditions

Lock Finish	US3	US5	US15	US15A	GM/ BSP	US10BP	US10BE	US26D	US26	10BE
Latch Face Plate Color	US3	US5	Nickel	Black	Black	Black	10BE	Nickel	Nickel	10BE
Latch Head Color	Nickel	Nickel	Nickel	Nickel	Nickel	Nickel	Nickel	Nickel	Nickel	Nickel
Standard Strike Plate Color	US3	US5	Nickel	Black	Black	Black	10BE	Nickel	Nickel	10BE
Cylinder Color	Brass	Brass	Nickel	Nickel	Nickel	Brass	Brass	Nickel	Nickel	Brass
Screw Color	Brass	Brass	Nickel	Black	Black	Black	Black	Nickel	Nickel	Black

***** For Standard Strike & Latch Options Only **Note:** All Deadbolt Latch Bolts are Nickel

Latch Filler Plate Black 035109 .70

YH & NT Accessories
Keys and Keying Cylinders

YALE KEY BLANKS AND SPECIAL KEYING CHARGES

	KEY BLANK DESCRIPTION	QUANTITY	MODEL NO	LIST PRICE
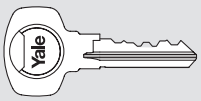	YH Collection Key Blank	50 per box	YR068003	1.40 ea.
	YH Collection 6 PIN KW DO NOT COPY Key Blank	50 per box	YR068013	2.00 ea.
	YH Collection Key - cut	50 per box	YR068550	2.00 ea.
	YH Collection 6 Pin PARA Key Blank	50 per box	YR068Y01	2.20 ea.
	YH Collection 6 PIN Schlage Key Blank	50 per box	YR068009	1.40 ea.
	YH Collection 6 PIN Schlage Key - cut	50 per box	YR068509	2.00 ea.
	YH Collection 6 PIN Schlage DO NOT COPY Key Blank	50 per box	YR068011	2.00 ea.
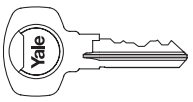	New Traditions/Yale Edge Series Key Blank	50 per box	YR068004	1.30 ea.
	New Traditions 5 PIN KW DO NOT COPY Key Blank	50 per box	YR068010	2.00 ea.
	New Traditions/Yale Edge Series Key - cut	50 per box	YR068500	1.70 ea.
	New Traditions 5 PIN Schlage Key Blank	50 per box	YR068008	1.30 ea.
	New Traditions 5 PIN Schlage Key - cut	50 per box	YR068508	1.70 ea.
	Yale Edge Series 5 PIN Schlage Key Blank	50 per box	SC1KEY	1.30 ea.

SPECIAL KEYING CHARGE DESCRIPTION		MODEL NO	LIST PRICE
Below applies to YH & NT Factory direct orders only.			
KA - Keyed Alike		KA	NC when specified
MK - Master Keyed		MK	1.30 ea.
BK - Builder Keyed		BK	1.80 ea.
BMK - Builder Keyed and Master Keyed		BMK	3.70 ea.
GMK - Grand Master Keyed		GMK	5.00 ea.
BKGM - Builder Keyed and Grand Master Keyed		BKGM	6.00 ea.
K-T-P - Keyed To Pass		K-T-P	1.40 ea.
Extra Cut Keys	YH Collection	YR068550	1.90 ea.
	New Traditions	YR068500	1.80 ea.
Extra Cut Master Keys	YH Collection	YR068551	2.70 ea.
	New Traditions	YR068511	2.30 ea.
Extra Cut Builder Keys	YH Collection	YR068558	2.70 ea.
	New Traditions	YR068521	2.30 ea.
Stamp control number on key (factory only)			1.80/key
QuickShip - Keyed Alike		KA	1.00 ea. net/cylinder
QuickShip - Special Keying			3.00 ea. net/cylinder

YH & NT Accessories
Keys and Keying Cylinders

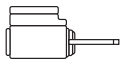
06D01*

YH & NT CYLINDER OPTIONS		
SC-1 5-PIN STANDARD FOR YH&NT, 6-PIN MUST BE SPECIFIED IF NEEDED	**MODEL NO**	**LIST PRICE**
5-PIN No charge when specified with New Traditions lock - compatible with F Series		
Brass Cylinder & 2 Brass Keys, Tailpiece, Low Stack, Entry, 03	YR068401	12.80 ea.
Brass Cylinder & 2 Brass Keys, Tailpiece, Low Stack, Deadbolt, 03	YR068402	12.80 ea.
Brass Cylinder & 2 Brass Keys, Tailpiece, Low Stack, Entry, 26	YR068405	12.80 ea.
Brass Cylinder & 2 Brass Keys, Tailpiece, Low Stack, Deadbolt, 26	YR068406	12.80 ea.
6-PIN No charge when specified with YH Collection lock - compatible with A Series		
Brass Cylinder & 2 Brass Keys, Tailpiece, Low Stack, Entry, 03	YR068D01	14.60 ea.
Brass Cylinder & 2 Brass Keys, Tailpiece,High Stack, Deadbolt, 03	YR068D02	14.60 ea.
Brass Cylinder & 2 Brass Keys, Tailpiece, Low Stack, Entry, 26	YR068D05	14.60 ea.
Brass Cylinder & 2 Brass Keys, Tailpiece, High Stack, Deadbolt, 26	YR068D06	14.60 ea.
KW-1 5-PIN STANDARD FOR NT, 6-PIN STANDARD FOR YH	**MODEL NO**	**LIST PRICE**
5-PIN No charge when specified with New Traditions lock		
Brass Cylinder & 2 Brass Keys, Tailpiece, Low Stack, Entry, 03	YR060003	8.60 ea.
Brass Cylinder & 2 Brass Keys, Tailpiece, Low Stack, Deadbolt, 03	YR060103	8.60 ea.
Brass Cylinder & 2 Brass Keys, Tailpiece, Low Stack, Entry, 26	YR060006	8.60 ea.
Brass Cylinder & 2 Brass Keys, Tailpiece, Low Stack, Deadbolt, 26	YR060106	8.60 ea.
6-PIN No charge when specified with YH Collection lock		
Brass Cylinder & 2 Brass Keys, Tailpiece, Low Stack, Entry, 03	YR06D013	10.20 ea.
Brass Cylinder & 2 Brass Keys, Tailpiece, Low Stack, Select Deadbolt, 03	YR06D303	10.20 ea.
Brass Cylinder & 2 Brass Keys, Tailpiece, High Stack, Premier Deadbolt, 03	YR06D103	10.20 ea.
Brass Cylinder & 2 Brass Keys, Tailpiece, Low Stack, Entry, 26	YR06D016	10.20 ea.
Brass Cylinder & 2 Brass Keys, Tailpiece, Low Stack, Select Deadbolt, 26	YR06D306	10.20 ea.
Brass Cylinder & 2 Brass Keys, Tailpiece, High Stack, Premier Deadbolt, 26	YR06D106	10.20 ea.
PARA FOR RESIDENTIAL PRODUCT ONLY	**MODEL NO**	**LIST PRICE**
6-PIN		
Brass Cylinder & 2 Brass Keys, Tailpiece, High Stack, Entry Lever, 03	YR06Y303	14.60 ea.
Brass Cylinder & 2 Brass Keys, Tailpiece, High Stack, Entry Lever, 26	YR06Y306	14.60 ea.
Brass Cylinder & 2 Brass Keys, Tailpiece, High Stack, 83/820 Deadbolt, 03	YR06Y403	14.60 ea.
Brass Cylinder & 2 Brass Keys, Tailpiece, High Stack, 83/820 Deadbolt, 26	YR06Y406	14.60 ea.
Brass Cylinder & 2 Brass Keys, Tailpiece, High Stack, Premier Deadbolt, 03	YR06Y413	14.60 ea.
Brass Cylinder & 2 Brass Keys, Tailpiece, High Stack, Premier Deadbolt, 26	YR06Y416	14.60 ea.
Brass Cylinder & 2 Brass Keys, Tailpiece, High Stack for Electronic ICN's	YR06Y406ICN	14.60 ea.

NOTE: For Interconnects add ICN to above part numbers (Adds Longer Interconnect tailpiece)

Accessories
Rekeying

REKEYING – KEYING KITS & REKEYING PARTS

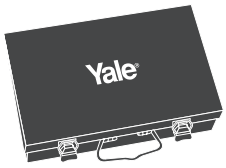

BOTTOM PIN

MASTER PIN

C-CLIP

E-CLIP 067204 E-CLIP 0672D4

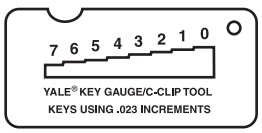

KEY CUT GAUGE

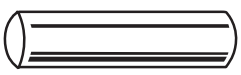

PLUG FOLLOWER

DESCRIPTION	QUANTITY	MODEL NO	LIST PRICE
Edge Keying Kit	Each	YR069B12	94.00
Yale KW Keying Kit	Each	YR069116	112.00
Yale SC-1 Keying Kit	Each	YR069115	94.00
KW-1 Pins			
.172 – #1 Bottom Pins	100 pieces	YR065011	8.00
.195 – #2 Bottom Pins	100 pieces	YR065012	8.00
.218 – #3 Bottom Pins	100 pieces	YR065013	8.00
.241 – #4 Bottom Pins	100 pieces	YR065014	8.00
.264 – #5 Bottom Pins	100 pieces	YR065015	8.00
.287 – #6 Bottom Pins	100 pieces	YR065016	8.00
.023 – #1 Master Pins	100 pieces	YR065001	8.00
.046 – #2 Master Pins	100 pieces	YR065002	8.00
.069 – #3 Master Pins	100 pieces	YR065003	8.00
.092 – #4 Master Pins	100 pieces	YR065004	8.00
.115 – #5 Master Pins	100 pieces	YR065005	8.00
.138 – #6 Master Pins	100 pieces	YR065006	8.00
SC-1 Pins			
.165 – #0 Bottom Pins	100 pieces	YR065600	8.00
.180 – #1 Bottom Pins	100 pieces	YR065611	8.00
.195 – #2 Bottom Pins	100 pieces	YR065612	8.00
.210 – #3 Bottom Pins	100 pieces	YR065613	8.00
.225 – #4 Bottom Pins	100 pieces	YR065614	8.00
.240 – #5 Bottom Pins	100 pieces	YR065615	8.00
.255 – #6 Bottom Pins	100 pieces	YR065616	8.00
.270 – #7 Bottom Pins	100 pieces	YR065617	8.00
.285 – #8 Bottom Pins	100 pieces	YR065618	8.00
.300 – #9 Bottom Pins	100 pieces	YR065619	8.00
.030 – #2 Master Pins	100 pieces	YR065602	8.00
.045 – #3 Master Pins	100 pieces	YR065603	8.00
.060 – #4 Master Pins	100 pieces	YR065604	8.00
.075 – #5 Master Pins	100 pieces	YR065605	8.00
.090 – #6 Master Pins	100 pieces	YR065606	8.00
.105 – #7 Master Pins	100 pieces	YR065607	8.00
.120 – #8 Master Pins	100 pieces	YR065608	8.00
.135 – #9 Master Pins	100 pieces	YR065609	8.00
Standard Top Pin	100 pieces	YR065008	8.00
Standard Top Pin (82,84 Deadbolts)	100 pieces	YR0650D8	8.00
Yale Builder Key Balls	100 pieces	YR067050	12.00
Cylinder Springs (High Stack)	100 pieces	YR067001(DBLT)	5.00
Cylinder Springs (Low Stack)	100 pieces	YR067002(ENT)	5.00
C-Clips	100 pieces	YR067201	5.00
E-Clips (#820,840,83,85 Deadbolts)	100 pieces	YR067204	18.00
E-Clips (#82,84 Deadbolts)	100 pieces	YR0672D4	18.00
E-Clips (PARA Deadbolts, Cyl 820/83)	100 pieces	YR0672Y6	18.00
E-Clips (PARA Deadbolts, Cyl Premier)	100 pieces	YR0672Y5	18.00
Spring Retainer Caps (low stack)	100 pieces	YR067101	12.00
Spring Retainer Caps (high stack)	100 pieces	YR067102	12.00
Key Cut Gauge/C-Clip Tool	Each	YR069012	5.00
Plug Follower	Each	YR069001	5.50
YH/NT Entry tailpiece	100 pieces	YR067304	19.00
Single Cylinder Tailpiece	100 pieces	YR067307	60.00
Double Cylinder Tailpiece	100 pieces	YR067308	60.00
Interconnected Cylinder Tailpiece	100 pieces	YR067307ICN	60.00

Accessories
Mounts and Samples

MOUNTS, DISPLAYS, & SAMPLES			
DESCRIPTION		**MODEL NO**	**LIST PRICE**
3 Hole Mount	hold up to 3 knobs, levers, or deadbolts	YR099152A	97.00
2 Hole Mount	hold up to 2 knobs, levers, or deadbolts	YR099153A	97.00
Handleset Mount		YR099162A	97.00
Interconnected Mount		AYRD-MNT-YRC-CM	97.00
Free-standing Floor Display - 3 Panel		YR099170	1500.00
Yale Logo Round Label for Mount, 2.5 inch		YR099166	13.00
YH Collection Square Logo Label for Mount, 2 inch		YR099164	13.00
New Traditions Square Logo Label for Mount, 2 inch		YR099165	13.00
YE Series Square Logo Label for Mount, 2 inch		YR099167	13.00
Pivot Collection® Square Logo Label for Mount, 2 inch		YR099168	13.00
Acrylic Clear Ring		YR099110	10.00
Finish Sample Rings		YR083002	20.50

Trusted every day

Yale Home
225 Episcopal Road
Berlin, CT 06037 USA
Tel 1-800-438-1951
Fax 1-800-338-0965
us.yalehome.com.com

Canada
160 Four Valley Drive
Vaughan, ON L4K 4T9 Canada
Tel 1-800-461-3007
Fax 1-800-461-8989
assaabloydss.ca

Customer Service Phone: 1-800-438-1951
Customer Service Fax: 1-800-338-0965
24/7 Support Phone: 1-855-213-5841
24/7 Support Email: Support@YaleLock.com
Website: us.yalehome.com
Email for orders: orders.yaleres@assaabloy.com

ASSA ABLOY QuickShip™ Program

RULES OF ENGAGEMENT:
- Orders placed ship following day.*
- Make NO additional investment and expand your offering

*Orders requiring keying or non-standard changes will delay ship time.
(examples: cylinders, latches, etc.)

ADDITIONAL CHARGES:
- Freight charge will be applied to orders less than $150.00 (contiguous 48 states only, Alaska and Hawaii are 'plus freight')
- Yale reserves the right to limit quantities
- Net keying charges:
  $1.00 per cylinder for keyed-alike
  $3.00 for BK and MK

HOW TO ORDER:
- Email QuickShip orders to: orders.yaleres@assaabloy.com
- Fax all QuickShip orders to: 877-888-2772
- Call Yale Customer Service for details: 800-438-1951

QUICKSHIP SELECTIONS:
Look for **BOLD** prices throughout all Yale product listings for ASSA ABLOY QuickShip availability.

THE YALE BRAND, with its unparalleled global reach and range of products, reassures more people in more countries than any other consumer locking solution.

THE ASSA ABLOY GROUP is the world´s leading manufacturer and supplier of locking solutions, dedicated to satisfying end-user needs for security, safety and convenience.

Yale®, Assure Lock®, Assure Lever®, New Traditions®, nexTouch®, YH Collection®, Yale Edge Series® and Yale Pro® are registered trademarks of Assa Abloy Residential Group. QuickShip™ is a trademark of Assa Abloy Residential Group. Other products' brand names may be trademarks or registered trademarks of their respective owners and are mentioned for reference purposes only. These materials are protected under US copyright laws. All contents current at time of publication. Assa Abloy Residential Group reserves the right to change availability of any item in this price book, its design, construction and/or its materials. Copyright 2022. Assa Abloy Residential Group. All rights reserved. Reproduction in whole or in part without the express written permission of Assa Abloy Residential Group, is prohibited.